FAST FIND INDEX

195

196

197

198

199

200-201

202

203

204

205

206

207

208

209

210-211

212

213

214

215

216

217

218

219

219

220

221

222

223

224

225

226

227

228

229

230

231

232-233

234

235

236

237

238

239

240

241

242

243,245

244

QUARTER-TURN LOCKS

192-245

mesan
ESSENTRA COMPONENTS

e-mail | info@mesanlocks.com web | www.mesanlocks.com

QUARTER-TURN LOCKS

M	F	
1	1	Zamak / chrome plated
1	2	Zamak / black coated
2	0	Polyamide / No finish

M MATERIAL **F** FINISH **DD** DRIVER CODE

DRIVERS

3 mm Double bit		M	F	Stock code
DD		1	1	30101127Y
13		1	2	30101126Y
		2	0	30102012Y

5 mm Double bit		M	F	Stock code
DD		1	1	30101099Y
15		1	2	30101125Y
		2	0	30102001Y

8 mm Square		M	F	Stock code
DD		1	1	30101113Y
28		1	2	30101065Y
		2	0	30102011Y

6 mm Square		M	F	Stock code
DD		1	1	30101058Y
26		1	2	30101139Y
		2	0	30102009Y

7 mm Square		M	F	Stock code
DD		1	1	30101039Y
27		1	2	30101138Y
		2	0	30102010Y

9 mm Triangular		M	F	Stock code
DD		1	1	30101066Y
39		1	2	30101140Y
		2	0	30102007Y

7 mm Triangular		M	F	Stock code
DD		1	1	30101124Y
37		1	2	30101120Y
		2	0	30102008Y

8 mm Triangular		M	F	Stock code
DD		1	1	30101114Y
38		1	2	30101064Y
		2	0	30102006Y

Slot		M	F	Stock code
DD		1	1	30101636Y
52		1	2	30101637Y
		2	0	•

Slot (2x4)		M	F	Stock code
DD		1	1	30101146Y
42		1	2	30101149Y
		2	0	30102005Y

8 mm Square Slot		M	F	Stock code
DD		1	1	30101175Y
58		1	2	30101176Y
		2	0	•

10 mm Hexagon female		M	F	Stock code
DD		1	1	30101169Y
61		1	2	30101170Y
		2	0	•

8 mm Hexagon female		M	F	Stock code
DD		1	1	30101195Y
68		1	2	30101196Y
		2	0	•

5x10 Slot		M	F	Stock code
DD		1	1	30101188Y
71		1	2	30101189Y
		2	0	•

6 mm Square		M	F	Stock code
DD		1	1	30101173Y
76		1	2	30101174Y
		2	0	•

Railway		M	F	Stock code
DD		1	1	30101171Y
88		1	2	30101172Y
		2	0	•

Eastern		M	F	Stock code
DD		1	1	30101177Y
91		1	2	30101178Y
		2	0	•

Tork (T-30)		M	F	Stock code
DD		1	1	30101213Y
92		1	2	•
		2	0	•

11 mm Hexagon male		M	F	Stock code
DD		1	1	30101675Y
97		1	2	30101676Y
		2	0	•

Fiat		M	F	Stock code
DD		1	1	30101677Y
95		1	2	30101678Y
		2	0	•

NEW EBR		M	F	Stock code
DD		1	1	30101939Y
86		1	2	•
		2	0	•

HOUSING, NUT, SEALING WASHER, SPRING, SCREW, O-RING

Housing		M	F	Stock code
	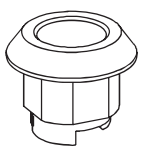	1	1	30301019Y
		1	2	30301035Y
		1	1	*30301226Y
		1	2	*30301283Y
		2	0	30302061Y

Nut		M	F	Stock code
	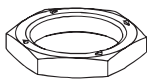	1	1	30501015Y
		2	0	30502002Y

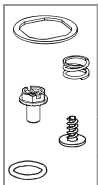	Sealing Washer	30802021Y
	Spring	30703001Y
	Screw (6x10 Kombi)	30603002Y
	Screw (5x11 RYSB)	30603055Y
	0'Ring (IP 65)	30802002Y

* Suitable for Railway driver

tel | +90 212 721 44 44 fax | +90 212 721 44 45

060 QUARTER TURN – SPRING LOADED

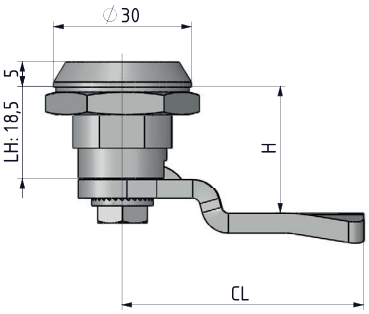

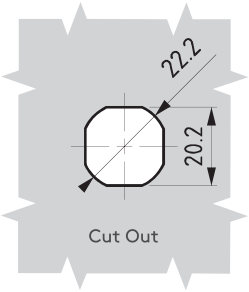

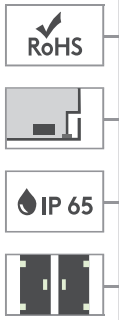

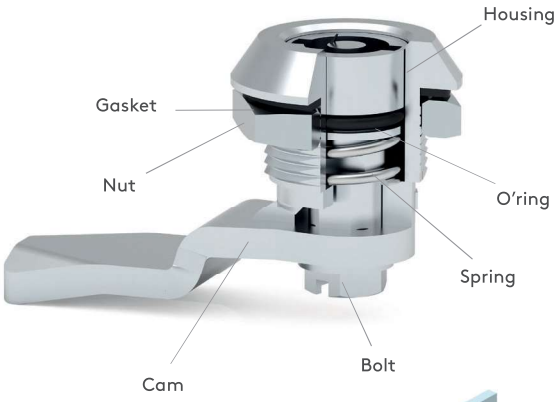

- **Stainless steel version: page: 458**
- Specially designed internal spring provides 1.5 mm of compression
- Cam does not rotate beyond quarter turn due to stop lip

MATERIAL

HOUSING:	Zamak DIN-EN 1774-ZnAl4Cu1 or PA6 GFR 30
DRIVER:	Zamak DIN-EN 1774-ZnAl4Cu1 or PA6 GFR 30
CAM:	Steel or plastic
GASKET:	Rubber

FINISH
Chrome plated or black coated

MATERIAL	M	FINISH	F
Zamak	1	Chrome plated	1
		Black coated	2
Plastic	2	No finish	0

Group Code	Housing		Driver		Driver No	Cam
060	M	F	M	F	DD	CC

For cams please check pages: 170 - 171
For rods please check pages: 178 - 188
For keys please check pages: 189 - 191

QUARTER TURN – WING KNOB

062

RoHS

IP 65

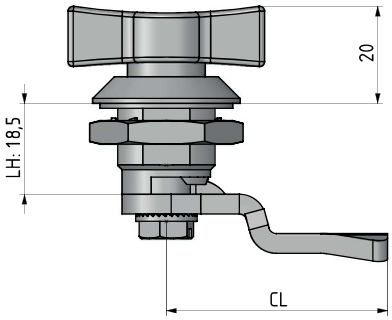

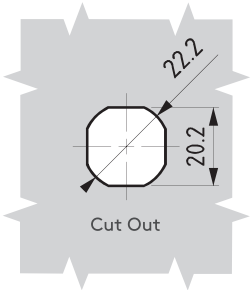

- Wing operates lock and serves as knob

MATERIAL

HOUSING:	Zamak DIN-EN 1774-ZnAl4Cu1 or PA6 GFR 30
KNOB:	Zamak DIN-EN 1774-ZnAl4Cu1 or PA6 GFR 30
CAM:	Steel or Plastic
GASKET:	Rubber

FINISH
Chrome or Black coated

MATERIAL	M	FINISH	F
Zamak	1	Chrome plated	1
		Black coated	2
Plastic	2	No finish	0

Group Code	Housing		Knob		Cam
062	M	F	M	F	CC

For cams please check pages: 170 - 171

For rods please check pages: 178 - 188

tel | +90 212 721 44 44 fax | +90 212 721 44 45

362 QUARTER TURN – WING KNOB

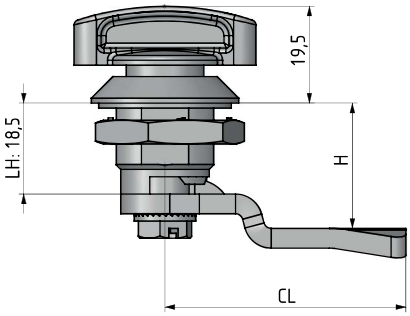

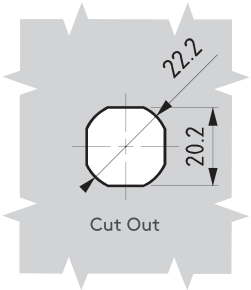

- Wing operates lock and serves as knob

MATERIAL

HOUSING:	Zamak DIN-EN 1774-ZnAl4Cu1 or PA6 GFR 30
KNOB:	Zamak DIN-EN 1774-ZnAl4Cu1 or PA6 GFR 30
CAM:	Steel or plastic
GASKET:	Rubber

FINISH

Chrome plated or black coated

MATERIAL	M	FINISH	F
Zamak	1	Chrome plated	1
		Black coated	2
Plastic	2	No finish	0

Group Code	Housing		Knob		Cam
362	M	F	M	F	CC

For cams please check pages: 170 - 171

For rods please check pages: 178 - 188

PADLOCKABLE WING KNOB

562

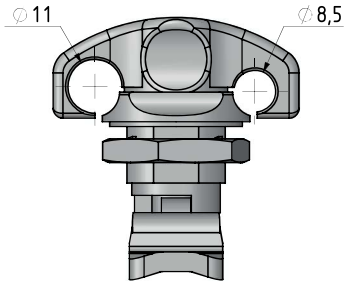

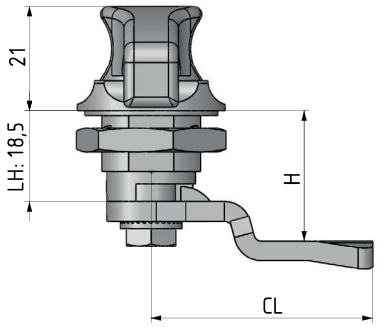

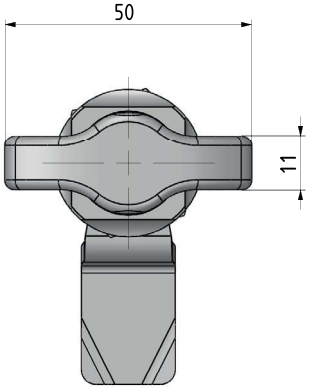

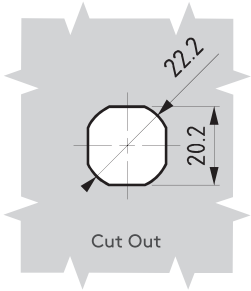

- **Stainless Steel version: page 471**
- Shackle diameter is
  for 11 mm hole:
  min. 8.5 mm
  max. 10 mm
  for 8.5 mm hole:
  min. 6 mm
  max. 7.5 mm

MATERIAL

HOUSING:	Zamak DIN-EN 1774-ZnAl4Cu1
KNOB:	Zamak DIN-EN 1774-ZnAl4Cu1
CAM:	Steel

FINISH
Chrome plated or black coated

FINISH	F
Chrome plated	1
Black coated	2

Group Code	Finish	Cam
562	F	CC

For cams please check pages: 170 - 171
For rods please check pages: 178 - 188

tel | +90 212 721 44 44 fax | +90 212 721 44 45

262 PADLOCKABLE WING KNOB

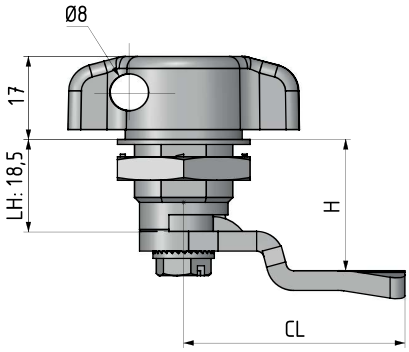

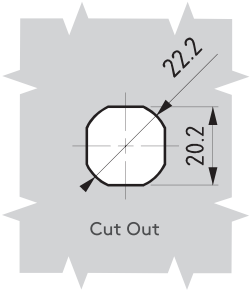

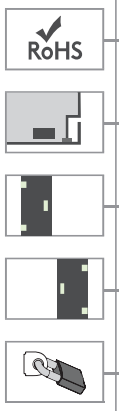

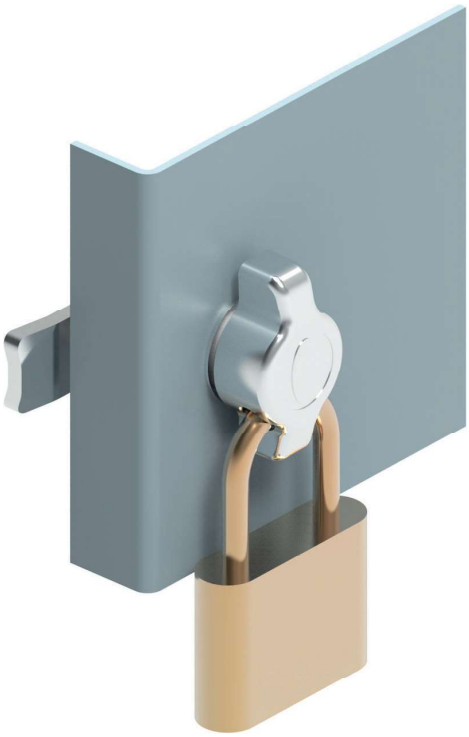

- Padlockable wing knob. Maximum shackle diameter 6 mm

MATERIAL

HOUSING:	Zamak DIN-EN 1774-ZnAl4Cu1
KNOB:	Zamak DIN-EN 1774-ZnAl4Cu1
CAM:	Steel

FINISH

Chrome plated or black coated

FINISH	F
Chrome plated	1
Black coated	2

DOOR DIRECTION	
Right hand	001
Left hand	002

Group Code	Finish	Cam	Door Direction
262	F	CC	

For cams please check pages: 170 - 171

For rods please check pages: 178 - 188

QUARTER TURN-PADLOCKABLE

662

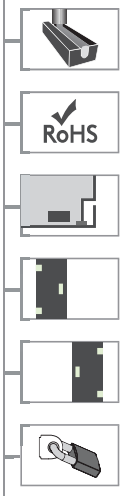

V: 1

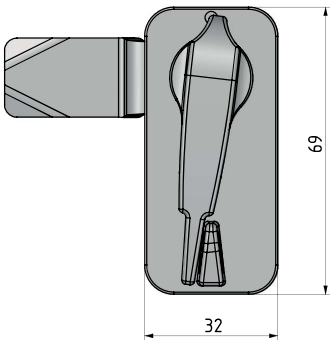

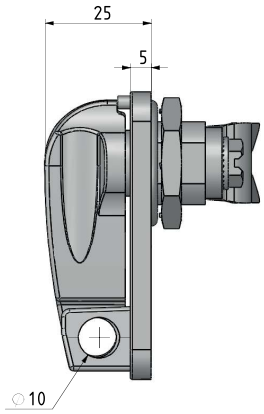

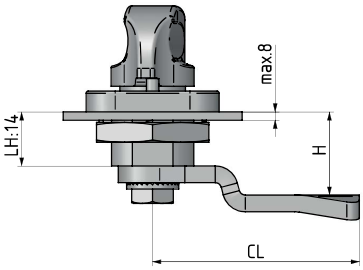

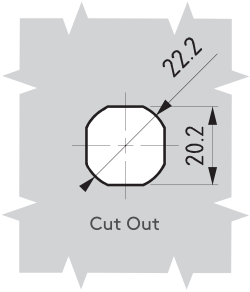

- Standard cams without stopper required for these locks
- Maximum shackle diameter 8 mm

MATERIAL

HOUSING: Zamak DIN-EN 1774-ZnAl4Cu1

KNOB: Zamak DIN-EN 1774-ZnAl4Cu1

CAM: Steel

FINISH

Chrome plated or black coated

MATERIAL	M	FINISH	F
Zamak	1	Chrome plated	1
		Black coated	2

DOOR DIRECTION	
Right hand	001
Left hand	002

Group Code	Version	Material	Finish	Cam	Door Direction
662	1	1	F	CC	

For cams please check pages: 170 - 171

tel | +90 212 721 44 44 fax | +90 212 721 44 45

V: 2

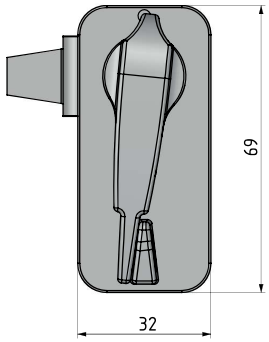

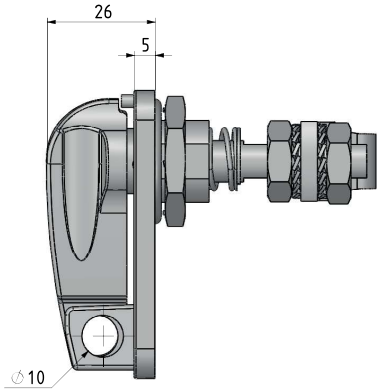

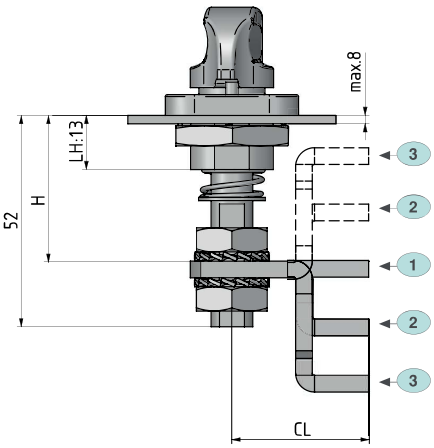

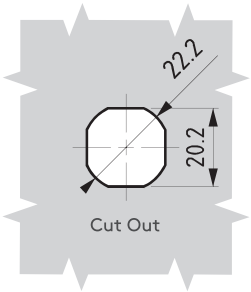

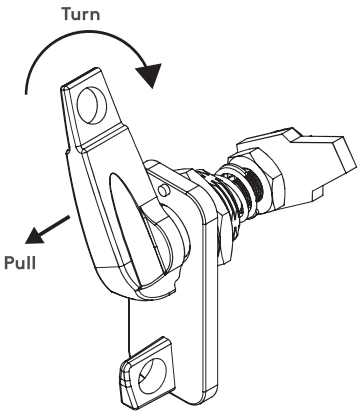

Left hand & Right hand
Pull and turn the knob

CAM	CC	CH	CL	POSITION	H: GRIP MIN	H: GRIP MAX
1	01	0	33	Flat	30	41,5
2	02	14	33	Up	16	27,5
				Down	44	55,5
3	03	27,5	33	Up	2,5	14
				Down	57,5	69

MATERIAL	M	FINISH	F
Zamak	1	Chrome plated	1
		Black coated	2

Group Code	Version	Material	Finish	Cam
662	2	1	F	CC

662

QUARTER TURN-PADLOCKABLE

- Adjustable cam
- Three different cam alternatives available
- Maximum shackle diameter 8 mm
- Suitable for left-hand and right-hand applications

MATERIAL

HOUSING: Zamak DIN-EN 1774-ZnAl4Cu1

KNOB: Zamak DIN-EN 1774-ZnAl4Cu1

CAM: Steel

FINISH

Chrome plated or black coated

PADLOCKABLE - 'L' HANDLE

211

RoHS

IP 65

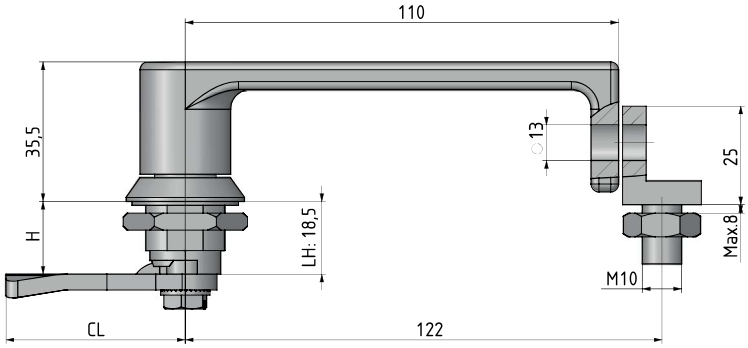

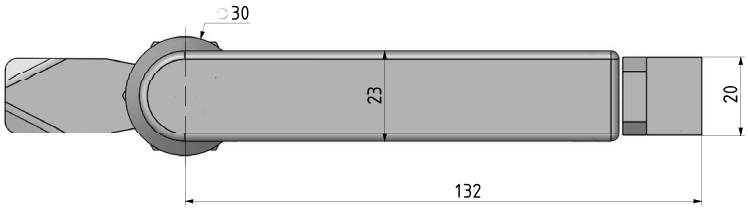

- **Stainless Steel version: page 470**
- Padlockable steel lock can be used for outdoor enclosures.
- Suitable for hygenic cabinets and electrical enclosures.

MATERIAL

HOUSING:	Zamak DIN-EN 1774-ZnAl4Cu1
KNOB:	Zamak DIN-EN 1774-ZnAl4Cu1
CAM:	Steel
GASKET:	Rubber

MATERIAL	M	FINISH	F
Zamak	1	Chrome plated	1
		Black coated	2

Group Code	Housing		Handle		Cam
211	1	F	1	F	CC

For cams please check pages: 170 - 171

tel | +90 212 721 44 44 fax | +90 212 721 44 45

960

QUARTER TURN - MODULER HANDLE

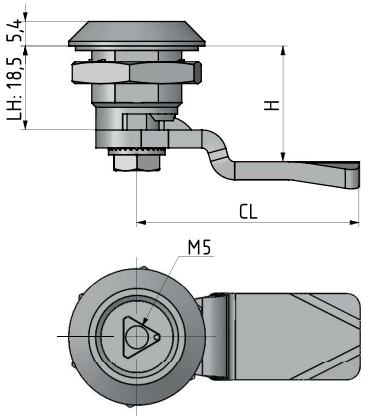

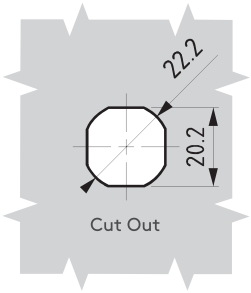

RoHS

IP 65

- Two different plastic handle options are available.
- Handles and lock can be ordered separately and assembled by single screw

MATERIAL

HOUSING:	Zamak DIN-EN 1774-ZnAl4Cu1
DRIVER:	Zamak DIN-EN 1774-ZnAl4Cu1
CAM:	Steel
GASKET:	Rubber

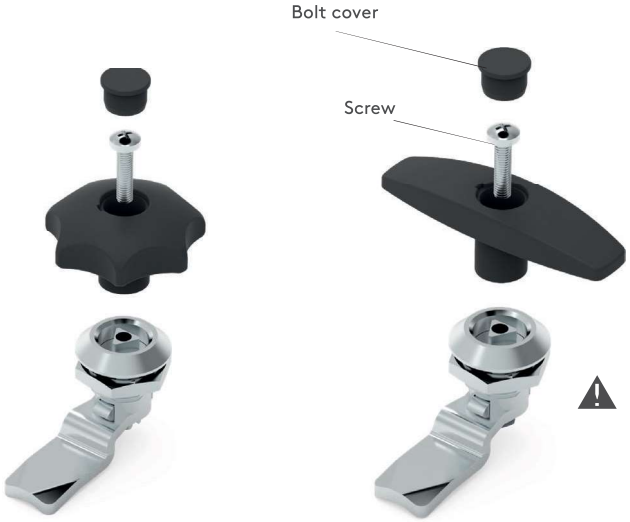

Note: Supplied with screw and cover

HANDLES

Star handle

'T' handle

320.02.218

320.02.219

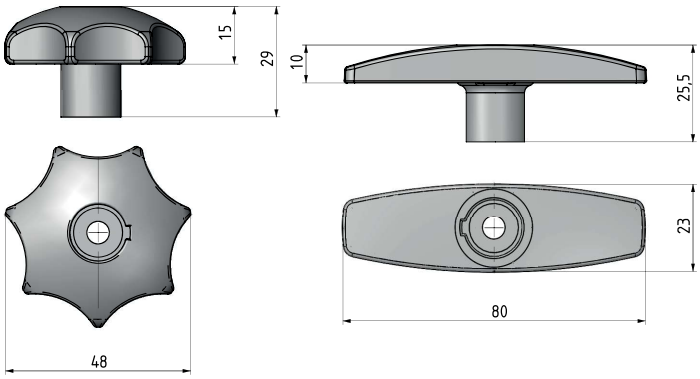

MATERIAL	M	FINISH	F
Zamak	1	Chrome plated	1
		Black coated	2

SPECIFICATIONS	HANDLE
No handle	00
Star handle	01
'T' handle	02

- Handles can be order separately

MATERIAL

HANDLE : PA6 GFR 30
COVER : PA6 GFR 30
BOLT : STEEL

Group Code	Handle	Housing		Driver		Driver No	Cam
960		1	F	1	F	39	CC

For cams please check pages: 170 - 171

SECURE QUARTER TURN

361

RoHS

IP 65

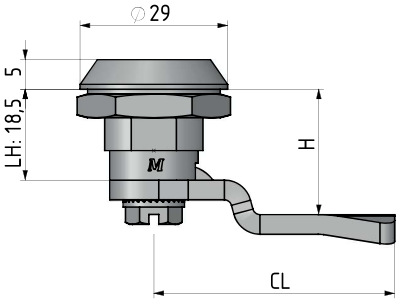

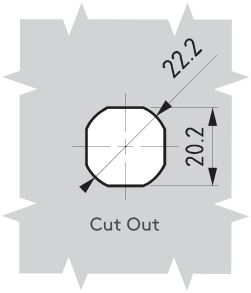

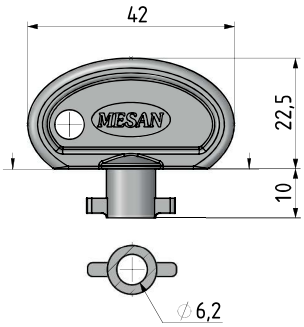

- When lock is open, key functions as a knob
- Key is specific to this lock and should be ordered at same time

MATERIAL

HOUSING:	Zamak DIN-EN 1774-ZnAl4Cu1
DRIVER:	Zamak DIN-EN 1774-ZnAl4Cu1
CAM:	Steel
GASKET:	Rubber

FINISH

Chrome plated or black coated

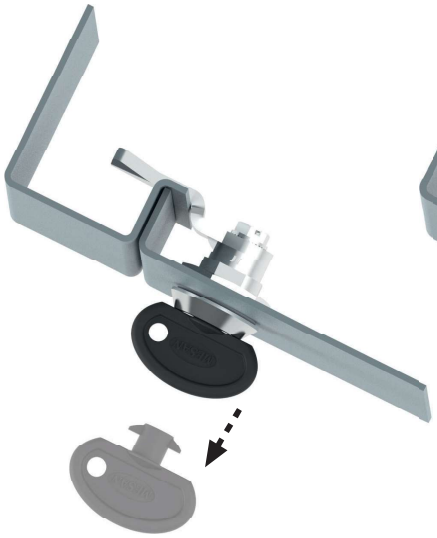

Key is removable at locked position

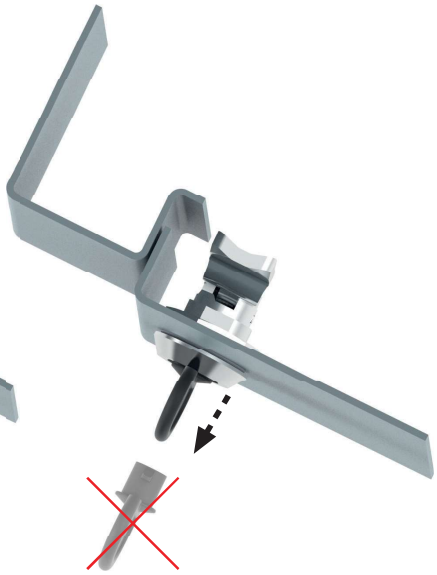

Key is removable at locked position

MATERIAL	M	FINISH	F
Zamak	1	Chrome plated	1
		Black coated	2

Group Code	Material	Finish	Cam
361	1	F	CC

Lock

Group Code	Material	Finish
167	1	F

Key

For cams please check pages: 170 - 171

tel | +90 212 721 44 44 fax | +90 212 721 44 45

461 SECURE QUARTER TURN

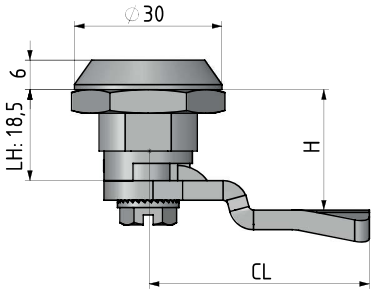

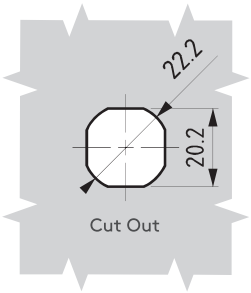

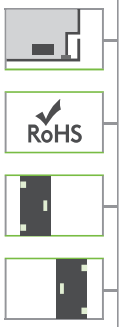

- When lock is open, key functions as a knob.

MATERIAL

HOUSING:	Zamak DIN-EN 1774-ZnAl4Cu1
DRIVER:	Zamak DIN-EN 1774-ZnAl4Cu1
CAM:	Steel
GASKET:	Rubber

Key is removable at locked position

Key is not removable at open position, it works like a knob.

DRIVERS		
5 mm Double bit	8 mm Square	Fiat
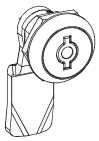	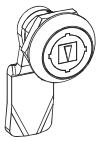	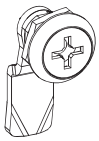
15	96	95

MATERIAL	M	FINISH	F
Zamak	1	Chrome plated	1

DOOR DIRECTION	
Right hand	001
Left hand	002

Group Code	Housing		Driver		Driver No	Cam	Door Direction
461	1	1	1	1	DD	CC	

SPECIAL KEYS

368-96
8 mm Square

368-95
Fiat

For cams please check pages: 170 - 171

QUARTER TURN – EASY FIXING 560

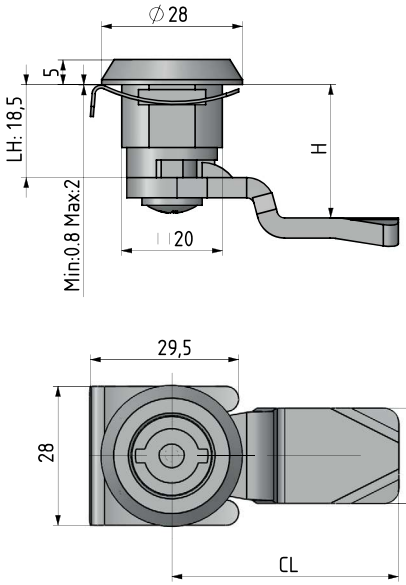

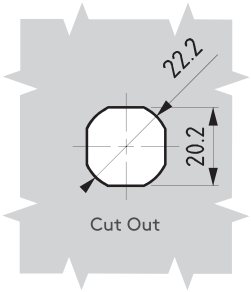

- Easy assembly by clips
- Specially designed internal spring provides 1.5 mm torsion
- Can be used for panel thickness 0.8 to 2 mm
- Please contact Essentra Components for special colours

MATERIAL

HOUSING:	PA6 GFR 30
DRIVER:	Zamak DIN-EN 1774-ZnAl4Cu1 or PA6 GFR 30
CAM:	Steel or plastic

Easy fixing

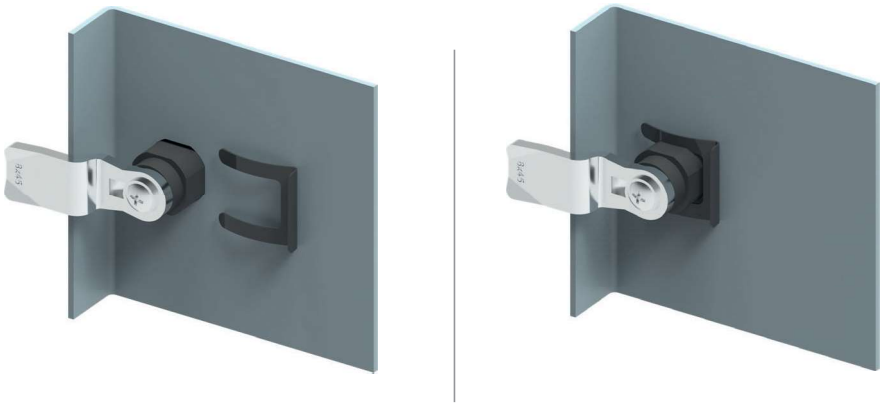

MATERIAL	M	FINISH	F
Zamak	1	Chrome plated	1
		Black coated	2
Plastic	2	No finish	0

Group Code	Housing		Driver		Driver No	Cam
560	2	0	M	F	DD	CC

For cams please check pages: 170 - 171
For drivers please check page: 194
For keys please check pages: 189 - 191

tel | +90 212 721 44 44 fax | +90 212 721 44 45

660 QUARTER TURN – EASY FIXING

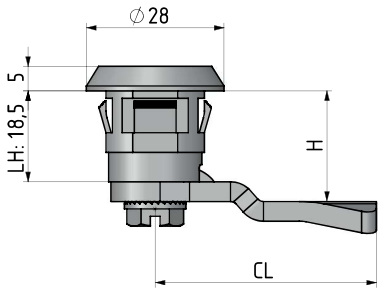

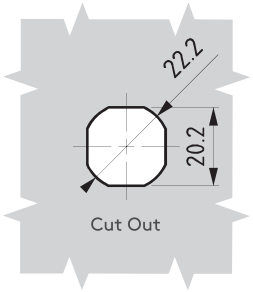

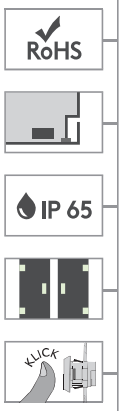

- Easy assembly by clips
- Mounting nut not required.
- Specially designed internal spring provides 1.5 mm torsion
- Can be used for panel thickness 0.8 to 2 mm
- Please contact Essentra Components for special colours

MATERIAL

HOUSING:	PA6 GFR 30
DRIVER:	Zamak DIN-EN 1774-ZnAl4Cu1 or PA6 GFR 30
CAM:	Steel or plastic

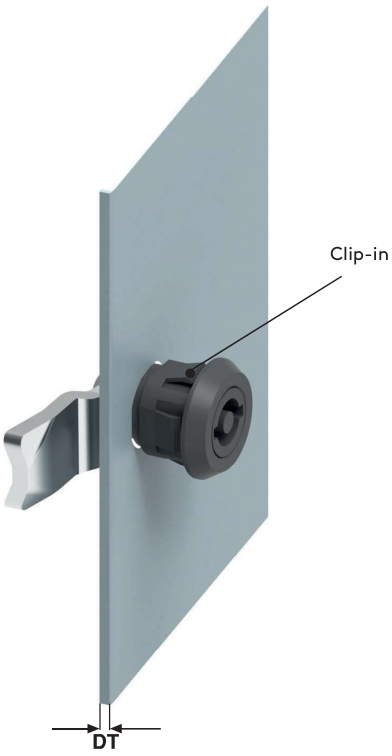

Door Thickness (DT)	Version
0.8 -1.2 mm	1
1.2 -1.5 mm	2
1.5 - 2 mm	3 *

* in this version IP 65 is not available

MATERIAL	M	FINISH	F
Zamak	1	Chrome plated	1
		Black coated	2
Plastic	2	No finish	0

Group Code	Version	Housing		Driver		Driver No	Cam
660	V	2	0	M	F	DD	CC

For cams please check pages: 170 - 171
For drivers please check page: 194
For keys please check pages: 189 - 191

QUARTER TURN – EASY FIXING

661

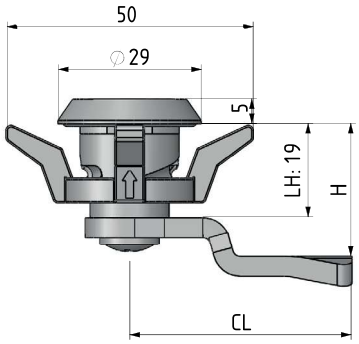

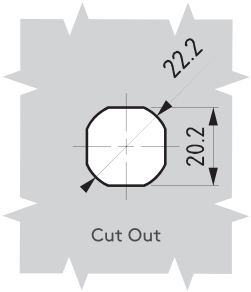

- Easy assembly - without tools
- Standard cut out
- 2.0 mm maximum panel thickness

MATERIAL

HOUSING:	Polyamide DIN-EN ISO 1043-1 PA6 GFR 30
DRIVER:	PA6 GFR 30
CAM:	Steel

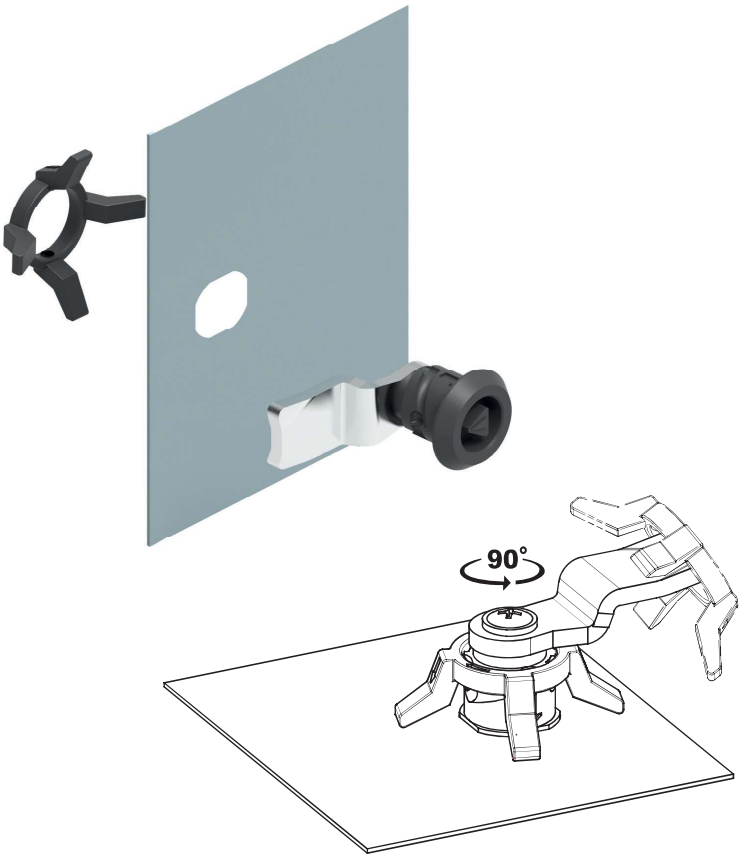

DRIVERS	
5 mm Double bit	
DD	
15	
8 mm Square	
DD	
28	
9 mm Triangular	
DD	
39	

Note: For different drivers please contact Essentra

MATERIAL	M	FINISH	F
Plastic	2	No finish	0

Group Code	Housing		Driver		Driver No	Cam
661	2	0	2	0	DD	CC

For cams please check pages: 170 - 171

For keys please check pages: 189 - 191

tel | +90 212 721 44 44 fax | +90 212 721 44 45

561 KNOB LOCK (Plastic)

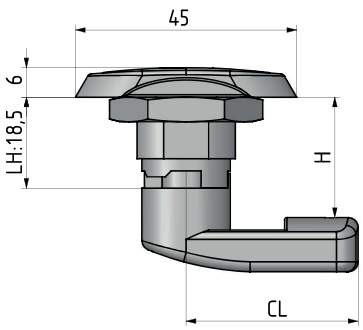

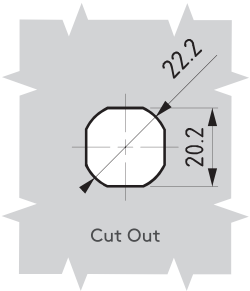

RoHS

IP 65

- Designed to act as a knob.
- For special colours, please contact Essentra

MATERIAL

HOUSING:	Polyamide DIN-EN ISO 1043-1 PA6 GFR 30
DRIVER:	Zamak or PA6 GFR 30
NUT:	Zamak or PA6 GFR 30
CAM:	Steel or plastic

MATERIAL	M	FINISH	F
Zamak	1	Chrome plated	1
		Black coated	2
Plastic	2	No finish	0

Group Code	Housing		Driver		Driver No	Cam
561	2	0	M	F	DD	CC

For cams please check pages: 170 - 171

For drivers please check page: 194

For keys please check pages: 189 - 191

QUARTER TURN – EASY FIXING

761

NEW

RoHS

IP 66

L R

V:1

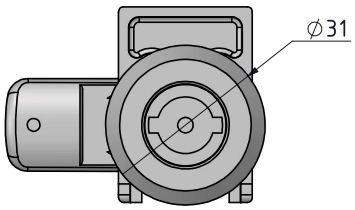

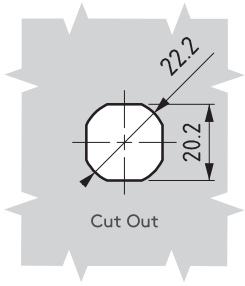

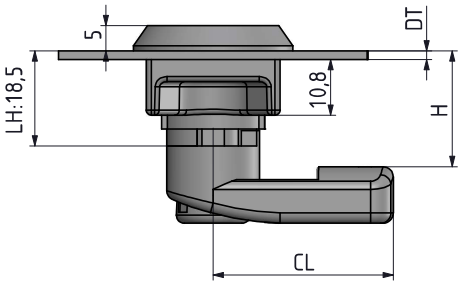

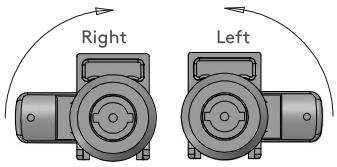

- Easy assembly by plastic clips
- Applicable on different panel thicknesses
- Various driver options are possible
- Standard cut out

MATERIAL

HOUSING:	Polyamide DIN-EN ISO 1043-1 PA6 GFR 30
DRIVER:	Plastic or zamak
CAM:	Plastic or steel

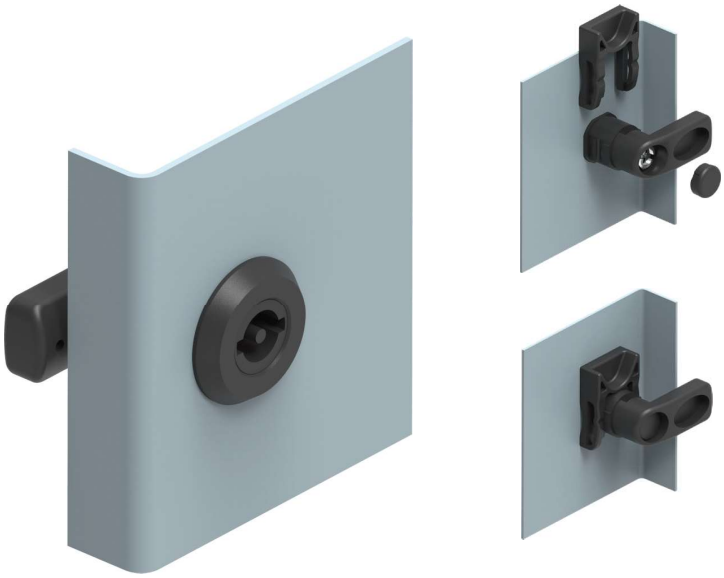

320.02.221
BOLT COVER (For grounding)

- Can order separately (only for plastic cams)

Note: For different colors please contact Essentra

DOOR THICKNESS	DT
1.2 -1.8 mm panel	12
1.8 -2.3 mm pane	23

DOOR DIRECTION	
Right hand	001
Left hand	002

MATERIAL	M	FINISH	F
Zamak	1	Chrome plated	1
		Black coated	2
Plastic	2	No finish	0

Group Code	Version	Driver		Driver No	Door Thickness	Cam	Door Direction
761	1	M	F	DD	DT	CC	

For cams please check pages: 170 - 171
For drivers please check page: 194
For keys please check pages: 189 - 191

tel | + 90 212 721 44 44 fax | + 90 212 721 44 45

761

QUARTER TURN – EASY FIXING

V: 2

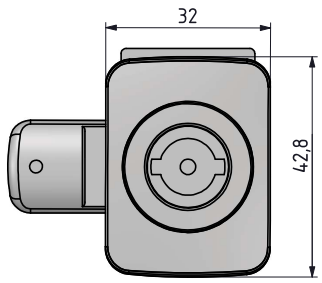

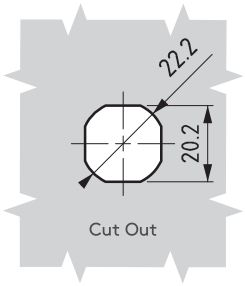

NEW

RoHS

IP 66

L R

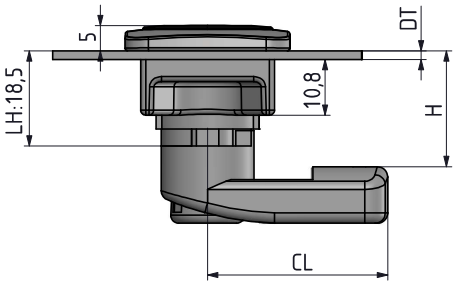

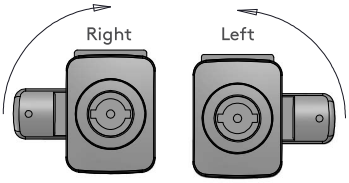

- Easy assembly by plastic clips
- Applicable on different panel thicknesses
- Various driver options are possible
- Logo application upon request
- Standard cut out

MATERIAL

HOUSING: Polyamide DIN-EN ISO 1043-1 PA6 GFR 30

DRIVER: Plastic or zamak

CAM: Plastic or steel

320.02.221

BOLT COVER (For grounding)

- Can order separately (only for plastic cams)

DOOR THICKNESS	DT
1.2 -1.8 mm panel	12
1.8 -2.3 mm pane	23

DOOR DIRECTION	
Right hand	001
Left hand	002

Note: For different colors please contact Essentra

MATERIAL	M	FINISH	F
Zamak	1	Chrome plated	1
		Black coated	2
Plastic	2	No finish	0

Group Code	Version	Driver		Driver No	Door Thickness	Cam	Door Direction
761	2	M	F	DD	DT	CC	

For cams please check pages: 170 - 171

For drivers please check page: 194

For keys please check pages: 189 - 191

QUARTER TURN - SPRING LOADED

760

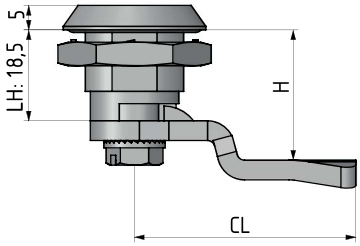

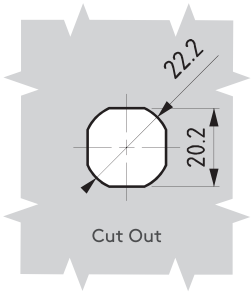

- Specially designed internal spring provides 1.5mm of compression.
- Cam does not rotate beyond quarter turn due to stop lip.

MATERIAL

HOUSING:	PA6 GFR 30
DRIVER:	Zamak DIN-EN 1774-ZnAl4Cu1 or PA6 GFR 30
CAM:	Steel or plastic
GASKET:	Polyurethane

Sealing in plastic housing.
This application aims to improve the sealing level in quarter turns.

MATERIAL	M	FINISH	F
Zamak	1	Chrome plated	1
		Black coated	2
Plastic	2	No finish	0

Group Code	Housing		Driver		Driver No	Cam
760	2	0	M	F	DD	CC

For cams please check pages: 170 - 171
For drivers please check page: 194
For keys please check pages: 189 - 191

tel | +90 212 721 44 44 fax | +90 212 721 44 45

360 QUARTER TURN – SPRING LOADED

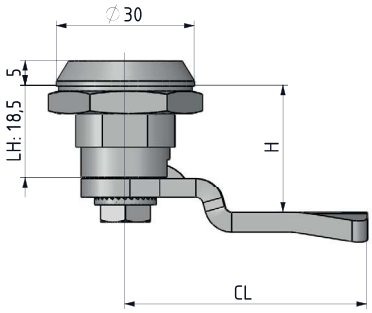

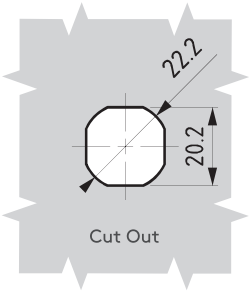

- Special clip for grounding
- Specially designed internal spring provides 1.5 mm of compression
- Cam does not rotate beyond quarter turn due to stop lip

MATERIAL

HOUSING: Zamak DIN-EN 1774-ZnAl4Cu1
DRIVER: Zamak DIN-EN 1774-ZnAl4Cu1
CAM: Steel or plastic
GASKET: Rubber
GROUNDING CLIP: Stainless steel

FINISH

Chrome or Black coated

Grounding clip

MATERIAL	M	FINISH	F
Zamak	1	Chrome plated	1
		Black coated	2

Group Code	Material	Finish	Driver No	Cam
360	M	F	DD	CC

For cams please check pages: 170 - 171
For drivers please check page: 194
For keys please check pages: 189 - 191

KNOB LOCK (Plastic)

161

RoHS

IP 65

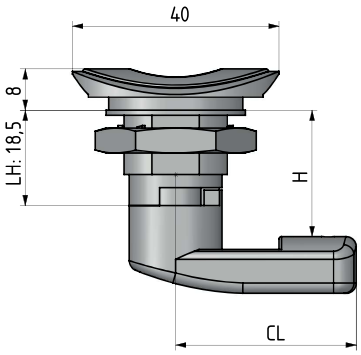

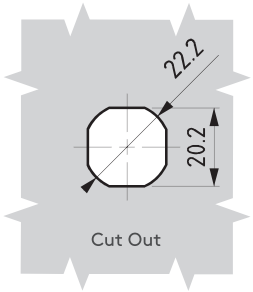

- Designed to act as a knob
- For special colours, please contact Essentra

MATERIAL

HOUSING:	Polyamide DIN-EN ISO 1043-1 PA6 GFR 30
DRIVER:	Zamak or PA6 GFR 30
NUT:	Zamak or PA6 GFR 30
CAM:	Steel or Plastic

MATERIAL	M	FINISH	F
Zamak	1	Chrome plated	1
		Black coated	2
Plastic	2	No finish	0

Group Code	Housing		Driver		Driver No	Cam
161	2	0	M	F	DD	CC

For cams please check pages: 170 - 171

For drivers please check page: 194

For keys please check pages: 189 - 191

tel | +90 212 721 44 44 fax | +90 212 721 44 45

261 KNOB LOCK (Plastic)

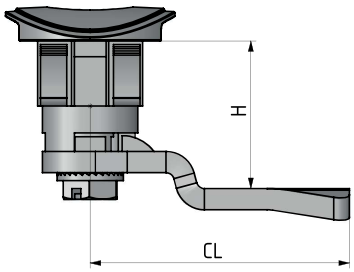

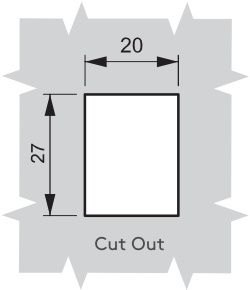

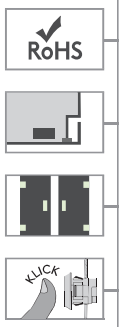

- Clip fixing for easy assembly
- Mounting nut not required
- Special 20 mm x 26 mm cut out
- There is no IP 65 version of this lock
- 1.8 mm maximum panel thickness

MATERIAL
HOUSING: Polyamide DIN-EN ISO 1043-1 PA6 GFR 30
DRIVER: Zamak or PA6 GFR 30
CAM: Steel or plastic

DT	
Min	Max
0.8 mm	1.8 mm

MATERIAL	M	FINISH	F
Zamak	1	Chrome plated	1
		Black coated	2
Plastic	2	No finish	0

Group Code	Housing		Driver		Driver No	Cam
261	2	0	M	F	DD	CC

For cams please check pages: 170 - 171
For drivers please check page: 194
For keys please check pages: 189 - 191

QUARTER TURN – SPRING CAM

160

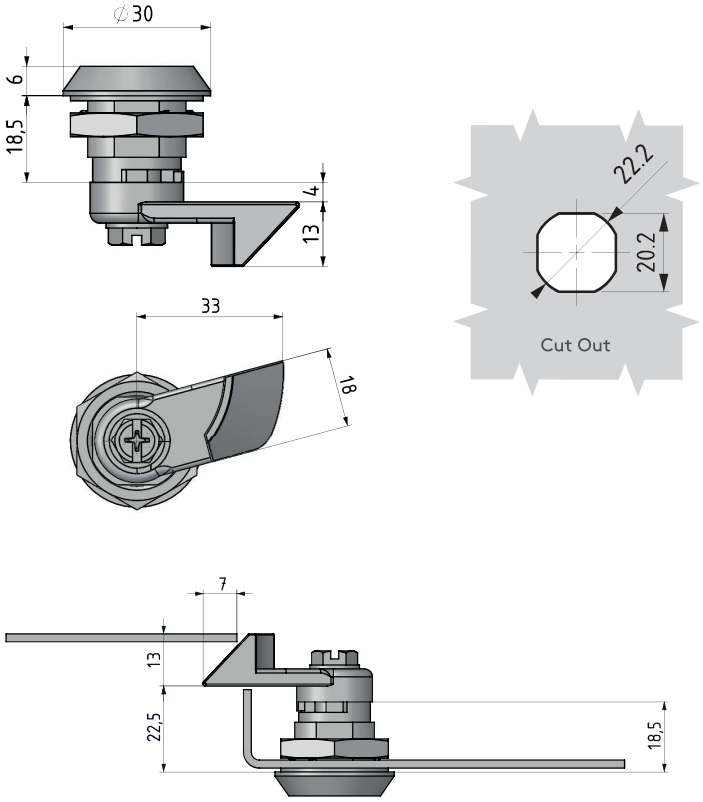

- **Stainless steel version: page: 458**
- Spring-loaded cam provides depress-to-lock action
- Distance between inside of lock face and front of cam fixed at 22.5 mm
- There is no IP 65 version of this lock, due to spring loaded cam

MATERIAL

HOUSING: Zamak DIN-EN 1774-ZnAl4Cu1

DRIVER: Zamak DIN-EN 1774-ZnAl4Cu11

GASKET: Rubber

FINISH

Chrome plated

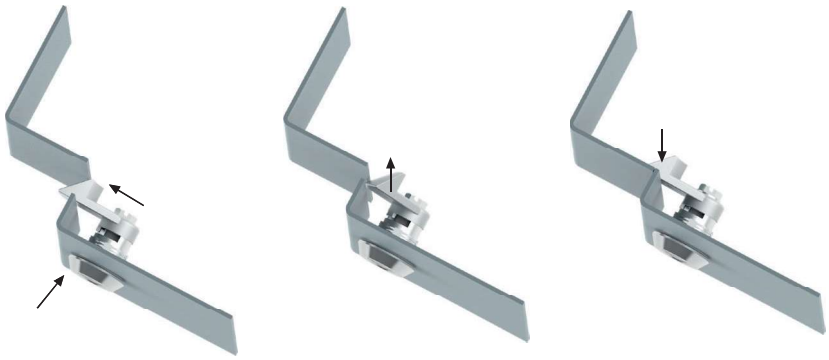

Position 1

Push the door

Position 2

Cam will move upright when touches the body

Position 3

When the cam is free, cam will move down right by spring and the door will lock

MATERIAL	M	FINISH	F
Zamak	1	Chrome plated	1
		Black coated	2

DOOR DIRECTION	
Right hand	001
Left hand	002

Group Code	Material	Finish	Driver No	Door Direction
160	1	F	DD	

For drivers please check page: 194

For keys please check pages: 189 - 191

tel | +90 212 721 44 44 fax | +90 212 721 44 45

260 QUARTER TURN – PADLOCKABLE

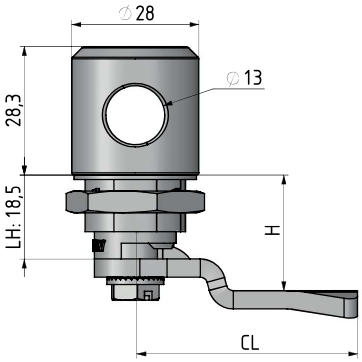

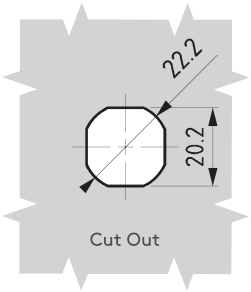

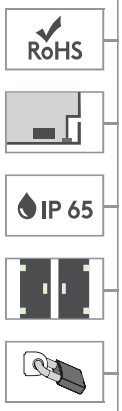

- **Stainless steel version: page: 459**
- Padlockable version
- Can be used with different drivers

MATERIAL

HOUSING:	Zamak DIN-EN 1774-ZnAl4Cu1
DRIVER:	Zamak DIN-EN 1774-ZnAl4Cu1
CAM :	Steel
GASKET:	Rubber

Application 1

Application 2

MATERIAL	M	FINISH	F
Zamak	1	Chrome plated	1
		Black coated	2

Group Code	Housing		Driver		Driver No	Cam
260	1	F	1	F	DD	CC

For cams please check pages: 170 - 171
For drivers please check page: 194
For keys please check pages: 189 - 191

PACO LOCK

162

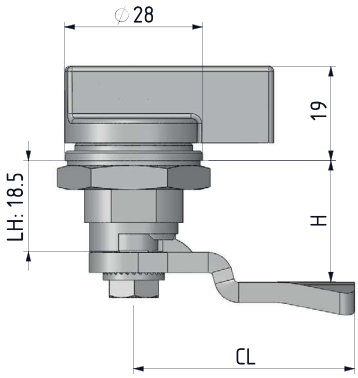

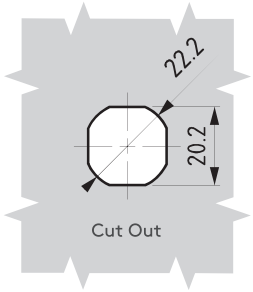

- Paco type knobw

MATERIAL

HOUSING:	Zamak DIN-EN 1774-ZnAl4Cu1
KNOB:	PA6 GFR 30
CAM:	Steel or plastic
GASKET:	Rubber

FINISH
Chrome plated

Group Code	Cam
162	CC

For cams please check pages: 170 - 171

For rods please check pages: 178 - 188

tel | +90 212 721 44 44 fax | +90 212 721 44 45

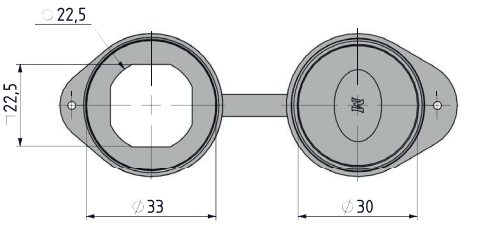

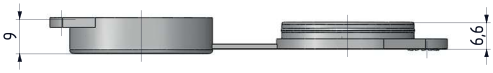

060 A7 DUST CAP

- Recommended when dust and humidity protection required
- Can be ordered separately

MATERIAL
Polyurethane

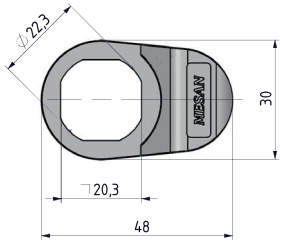

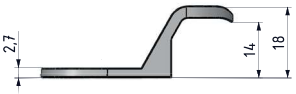

060 A2 LOCK HANDLE

- Reduces the LH and H dimensions by 1 mm. Choose CH -1 mm for cam selection compared to unused

MATERIAL
PA6 GFR 30

FIXING DEVICE

060 A3

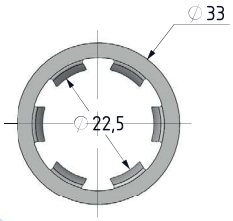

- Prevents rotation
- For applications subject to vibration

MATERIAL
Steel

FINISH
Zinc plated

PADLOCK ADAPTER

060 A8

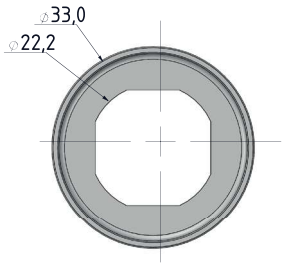

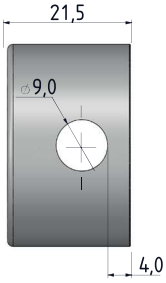

- Max. shackle diameters is 8 mm
- Reduces the LH and H dimensions by 2 mm. Choose CH -2 mm for cam selection compared to unused

MATERIAL
Steel

FINISH
Zinc plated

tel | +90 212 721 44 44 fax | +90 212 721 44 45

060 A5 FIXING DEVICE

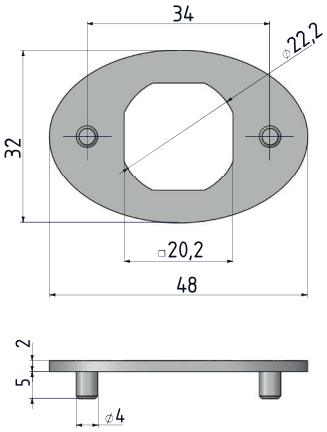

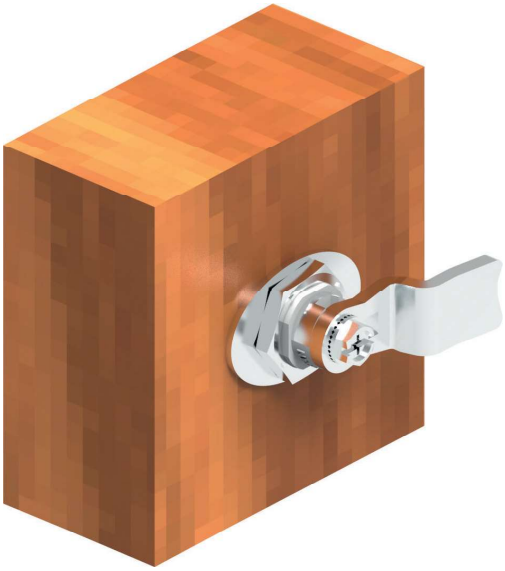

- Fixing device for wooden applications

MATERIAL
Zamak DIN-EN 1774-ZnAl4Cu1

FINISH
Zinc plated

060 A6 SPACER

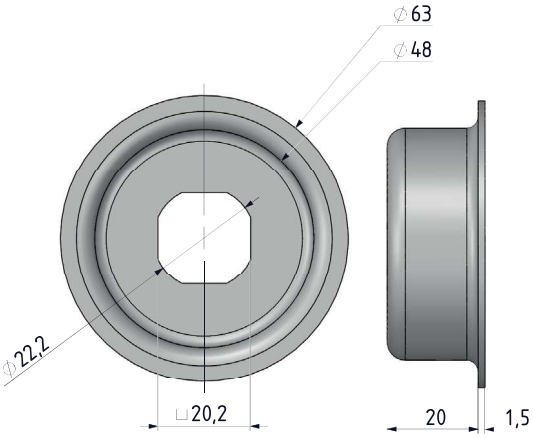

- Allows lock to be fitted to thick doors
- Easy fixing for isolated doors

MATERIAL
Steel

FINISH
Zinc plated

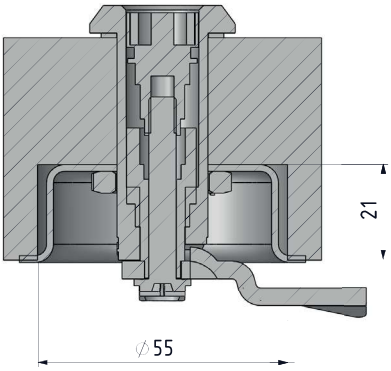

STEPPED COVER LOCK

064

RoHS

IP 65

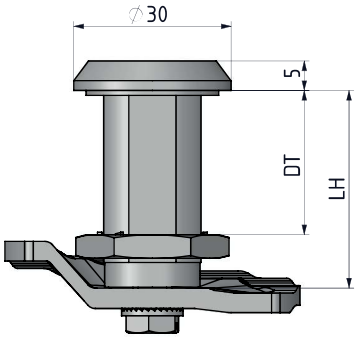

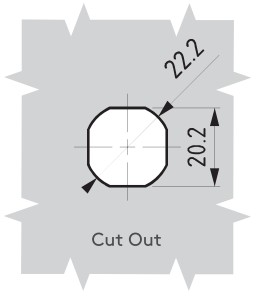

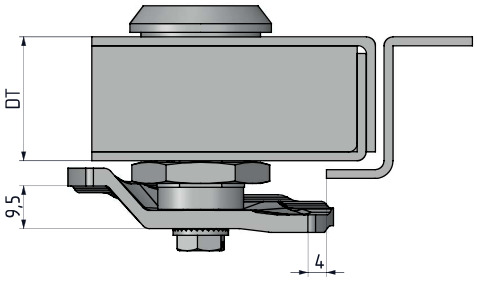

LH	DT
30	20
40	30
50	40
60	50

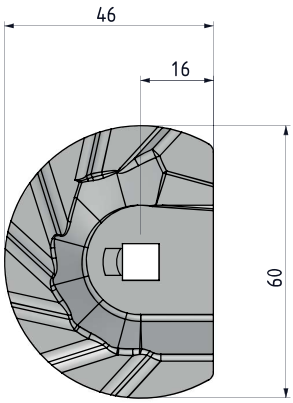

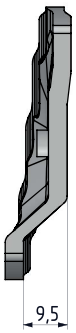

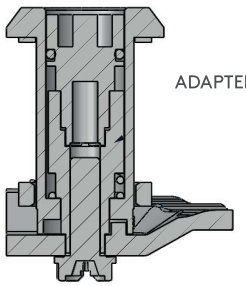

- For soundproof or isolated doors
- Tight closure achievable with 270° cam rotation and stepped cam
- Lock supplied with standard housing

MATERIAL

HOUSING: Zamak DIN-EN 1774-ZnAl4Cu1

DRIVER: Zamak DIN-EN 1774-ZnAl4Cu1

CAM: Zamak DIN-EN 1774-ZnAl4Cu1

GASKET: Rubber

FINISH

Chrome or Black coated

MATERIAL	M	FINISH	F
Zamak	1	Chrome plated	1
		Black coated	2

Group Code	Material	Finish	Driver No	Door Thickness	Cam
064	1	F	DD	DT	99

For drivers please check pages: 194

For keys please check pages: 189 - 191

tel | +90 212 721 44 44 fax | +90 212 721 44 45

064

QUARTER TURN – SPRING LOADED

RoHS

IP 65

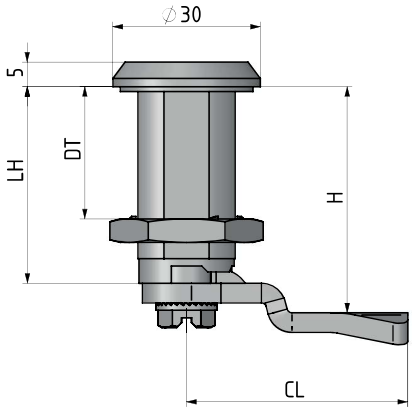

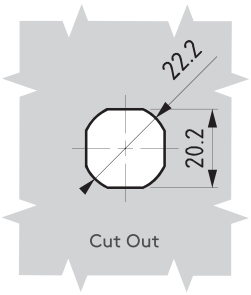

LH	DT
30	20
40	30
50	40
60	50

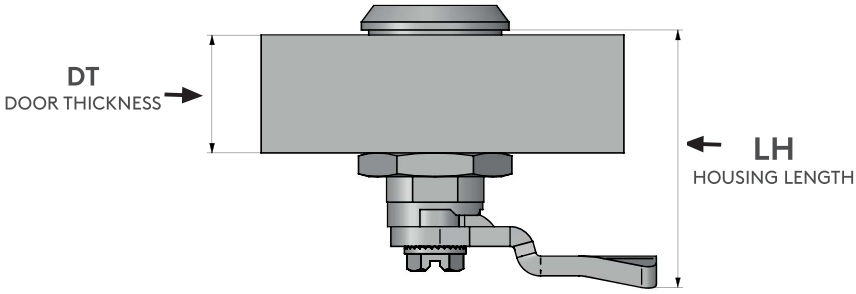

- **Stainless steel version: page: 457**
- For soundproof or isolated doors
- Supplied with standard housing

MATERIAL

HOUSING: Zamak DIN-EN 1774-ZnAl4Cu1
DRIVER: Zamak DIN-EN 1774-ZnAl4Cu1
CAM: Steel
GASKET: Rubber

FINISH

Chrome plated or black coated

MATERIAL	M	FINISH	F
Zamak	1	Chrome plated	1
		Black coated	2

Group Code	Material	Finish	Driver No	Door Thickness	Cam
064	1	F	DD	DT	CC

For cams please check pages: 170 - 171
For drivers please check page: 194
For keys please check pages: 189 - 191

QUARTER TURN – WING KNOB

064

RoHS

IP 65

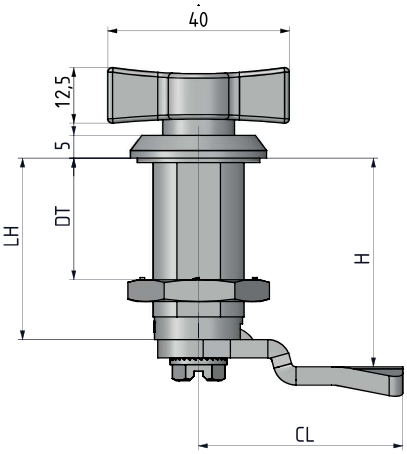

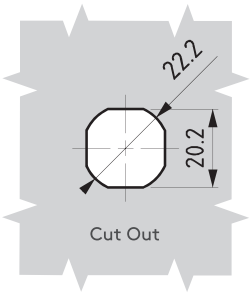

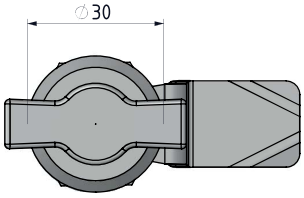

LH	DT
30	20
40	30
50	40
60	50

- For soundproof or isolated doors
- Supplied with standard housing

MATERIAL

HOUSING: Zamak DIN-EN 1774-ZnAl4Cu1
DRIVER: Zamak DIN-EN 1774-ZnAl4Cu1
CAM: Steel
GASKET: Rubber

FINISH

Chrome or Black coated

MATERIAL	M	FINISH	F
Zamak	1	Chrome plated	1
		Black coated	2

Group Code	Knob	Door Thickness	Material	Finish	Cam
064	062	DT	1	F	CC

For cams please check pages: 170 - 171

For rods please check pages: 178 - 188

tel | +90 212 721 44 44 fax | +90 212 721 44 45

064 QUARTER TURN – WING KNOB

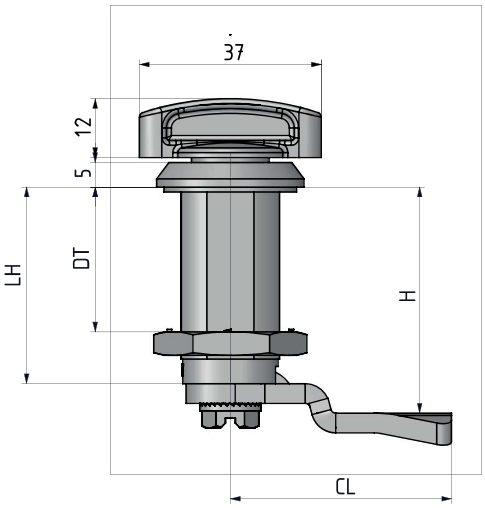

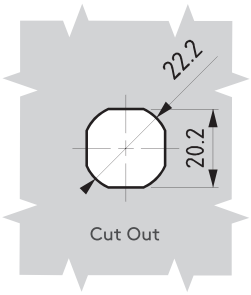

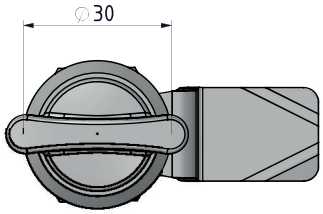

LH	DT
30	20
40	30
50	40
60	50

- For sound-proof or isolated doors
- Supplied with standard housing

MATERIAL

HOUSING: Zamak DIN-EN 1774-ZnAl4Cu1
DRIVER: Zamak DIN-EN 1774-ZnAl4Cu1
CAM: Steel
GASKET: Rubber

FINISH

Chrome plated or black coated

MATERIAL	M	FINISH	F
Zamak	1	Chrome plated	1
		Black coated	2

Group Code	Knob	Door Thickness	Material	Finish	Cam
064	362	DT	1	F	CC

For cams please check pages: 170 - 171
For rods please check pages: 178 - 188

COMPRESSION LOCK

040

RoHS

IP 65

L

R

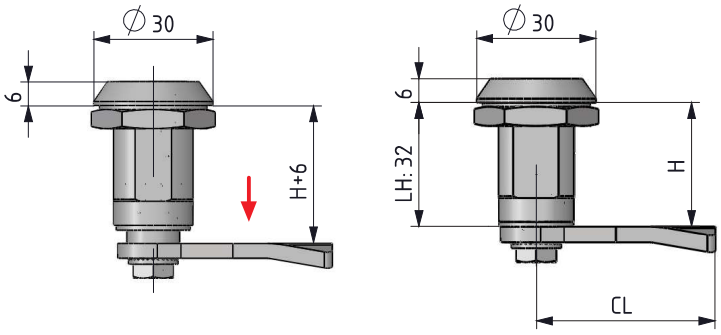

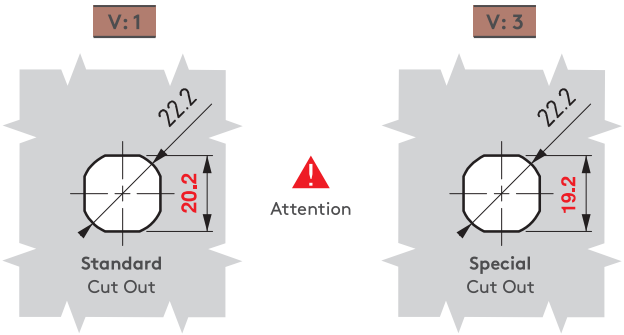

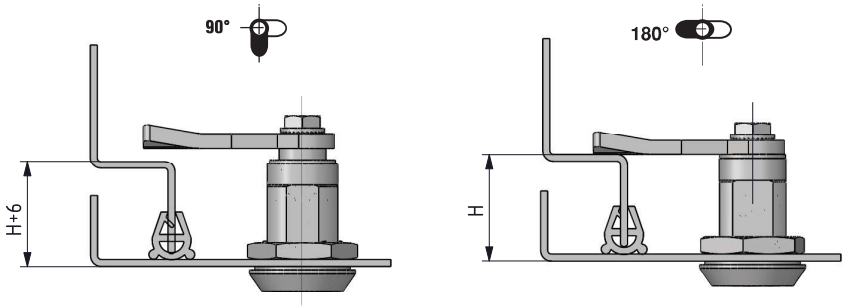

The first 90° of key rotation turns the cam to locking position

Further key rotation 180° applies 6 mm compression

- **Stainless Steel version: page 462**
- Used for cabinets that require better sealing under vibrating conditions
- Provides 6 mm of compression
- Provides noise isolation
- Alternative drivers/cams available
- Standard cams without stopper required for these locks
- The lock has been tested according to the DIN EN 61373 Category 1-B for vibration and shock.
- Working Temprature Range: -50/+80 C
  M22 Nut :
  should be fixed with 20 Nm
  M10 Nut:
  should be fixed with 10 Nm
- Threadlocker is applied to the nut threads to get extra fastness against vibration and shock
- Max load capacity: 562 N

MATERIAL

HOUSING:	Zamak DIN-EN 1774-ZnAl4Cu1
DRIVER:	Zamak DIN-EN 1774-ZnAl4Cu1
CAM:	Steel
GASKET:	Rubber

FINISH

Chrome plated or black coated

For cams please check pages:: 172 - 173

For keys please check pages: 189 - 191

KNOB	
DD	94

DRIVERS				
3 mm Double bit	5 mm Double bit	Tubular key	8 mm Hexagon	8 mm Hexagon with security pin
DD 13	DD 15	DD 93	DD 68	DD 69
Railway	8 mm Square	2X4 mm Slot	7 mm Triangular	8 mm Triangular
DD 88	DD 28	DD 42	DD 37	DD 38

MATERIAL	M	FINISH	F
Zamak	1	Chrome plated	1
		Black coated	2

DOOR DIRECTION	
Right hand	001
Left hand	002

Group Code	Version	Material	Finish	Driver	Cam	Door Direction
040	V	1	F	DD	CC	

tel | + 90 212 721 44 44 fax | + 90 212 721 44 45

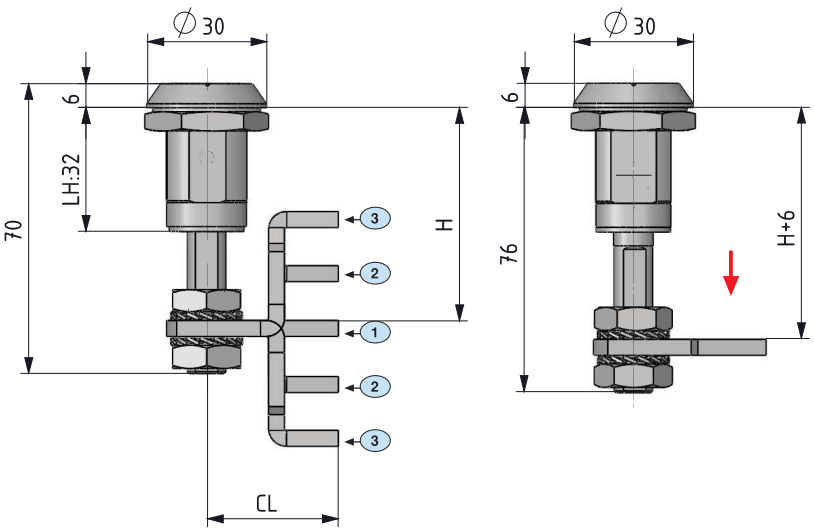

040 COMPRESSION LOCK

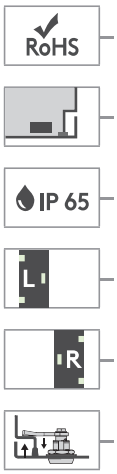

V: 2

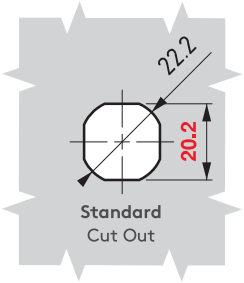

Attention

V: 4

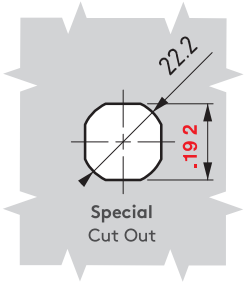

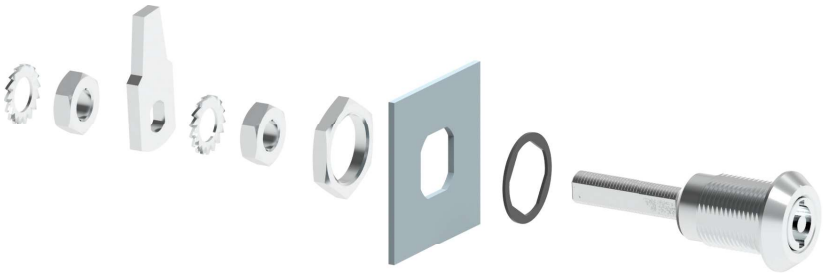

- Used for cabinets that require better sealing under vibrating conditions
- Provides 6 mm of compression
- Wide grip range with adjustable screw
- Provides noise isolation.
- Different drivers/cams available
- Three cam alternatives available
- The lock has been tested according to the DIN EN 61373 Category 1-B for vibration and shock.
- Working Temprature Range: -50/+80 C
  M22 Nut :
  should be fixed with 20 Nm
  M10 Nut:
  should be fixed with 10 Nm
- Threadlocker is applied to the nut threads to get extra fastness against vibration and shock
- Max load capacity: 562 N

CAM	STOCK CODE	CC	CH	CL	POSITION	H GRİP MIN	H GRİP MAX
1	30403565Y	01	0	33	Düz	41	58
2	30403566Y	02	14	33	Yukarı	27	44
					Aşağı	55	72
3	30403567Y	03	27,5	33	Yukarı	13,5	30,5
					Aşağı	68	85

MATERIAL

HOUSING:	Zamak DIN-EN 1774-ZnAl4Cu1
DRIVER:	Zamak DIN-EN 1774-ZnAl4Cu1
CAM:	Steel
GASKET:	Rubber

MATERIAL	M	FINISH	F
Zamak	1	Chrome plated	1
		Black coated	2

DOOR DIRECTION	
Right hand	001
Left hand	002

Group Code	Version	Material	Finish	Driver	Cam	Door Direction
040	V	1	F	DD	CC	

FIXING DEVICE

- Can be ordered separately
  ORDER CODE: 32005018Y

MINI COMPRESSION LOCK

140

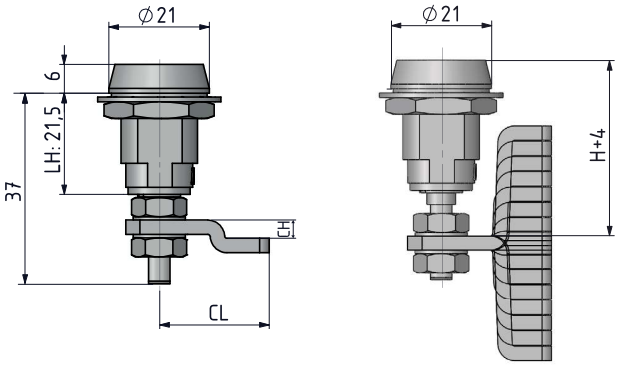

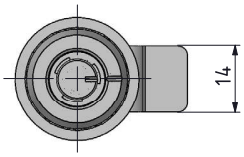

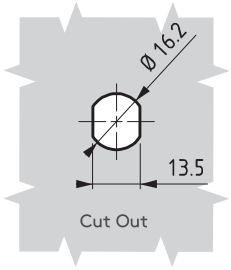

- **Stainless steel version: page 460**
- Used for cabinets that require better sealing under vibrating conditions
- 4 mm compression ratio
- Provides noise isolation
- Driver and cam alternatives available

MATERIAL
HOUSING : Zamak DIN-EN 1774-ZnAl4Cu1
DRIVER: Zamak DIN-EN 1774-ZnAl4Cu1
CAM: Steel

FINISH
Chrome plated or black coated

CAM	STOCK CODE	CC	CH	CL	H GRİP MIN	H GRİP MAX
1	30403606Y	01	0	23	26.2	29.4
2	30403607Y	02	1	23	25.2	28.4
3	30403608Y	03	3.8	23	22.4	25.6
4	30403609Y	04	7	23	19.2	22.4
5	30403610Y	05	10.2	23	16	19.2
6	30403611Y	06	13.4	23	12.8	16
7	30403612Y	07	16.6	23	9.6	12.8
8	30403613Y	08	19.8	23	6.4	9.6
9	30403614Y	09	23	23	3.2	6.4

KNOB

DD	94

DRIVERS

Tubular key	
DD	93
4 mm Hexagon	
DD	64
Slot	
DD	45

DUST CAP

140 A1

(Order separately)

MATERIALPolyurethane

MATERIAL	M	FINISH	F
Zamak	1	Chrome plated	1
		Black coated	2

Group Code	Material	Finish	Driver	Cam
140	1	F	DD	CC

tel | + 90 212 721 44 44 fax | + 90 212 721 44 45

045 COMPRESSION - SPRING LATCH

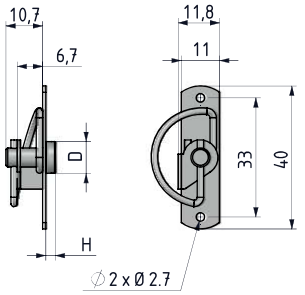

Small

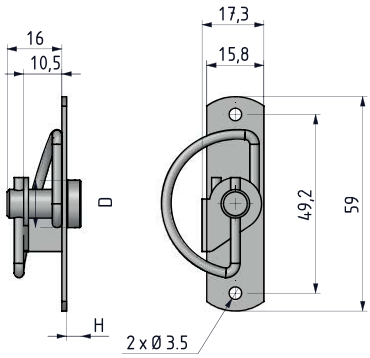

Medium

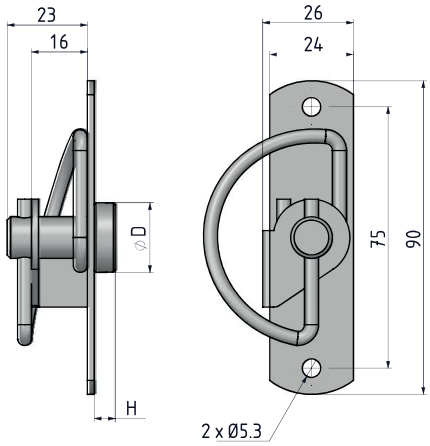

Large

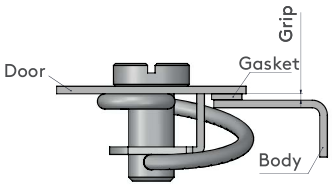

- **Stainless Steel version: page 469**
- Fix small panels to frame with ease
- Quarter-turn locking
- Easy assembly
- For doors with a bend of 24 mm

MATERIAL

BODY:	Steel
DRIVER:	Steel
SPRING:	Stainless steel

	DRIVERS			
V	DD	Driver name	D∅	H
1	12	Slot - Small	10	3
	13	Knurled - Small	10.5	12
2	21	Hexagon Female 4 mm	12	3.5
	22	Slot - Medium	12	3.5
	23	Knurled - Small	13	17.5
3	31	Hexagon Female 8 mm	20	6
	32	Slot - Large	20	5

Hexagon Female

Slot

Knurled

CAMS		
CC	Cam name	VERSION
41	Smooth Spring - Small	1
42	Smooth Spring - Medium	2
52	Serrated Spring - Medium	2
43	Smooth Spring - Large	3
53	Serrated Spring - Large	3

VERSIONS	
V	Product
1	Small Spring Latch
2	Medium Spring Latch
3	Large Spring Latch

MATERIAL	M	FINISH	F
Steel	6	Zinc Plated	3

Group Code	Version	Material	Finish	Driver	Cam
045	V	6	3	DD	CC

MINI QUARTER TURN – EASY FIXING

366

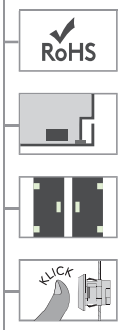

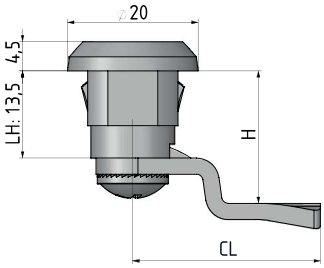

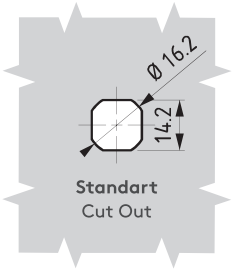

V: 1

- Easy assembly by clips
- Specially designed internal spring provides 1 mm torsion

MATERIAL

HOUSING:	PA6 GFR 30
DRIVER:	Zamak DIN-EN 1774-ZnAl4Cu1 or PA6 GFR 30
CAM:	Steel

DT
Door Thickness:
0.8 mm - 1.2 mm

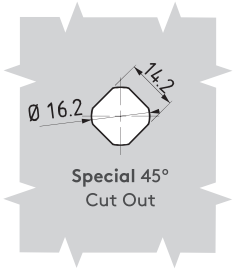

V: 2

Application Keys
Code: 267

DRIVERS			
6 mm Square		M	F
DD		1	1
		1	2
26		2	0
7 mm Triangular		M	F
DD		1	1
		1	2
37		2	0
Slot		M	F
DD		1	1
		1	2
42		2	0

MATERIAL	M	FINISH	F
Zamak	1	Chrome plated	1
		Black coated	2
Plastic	2	No finish	0

Group Code	Version	Housing		Driver		Driver No	Cam
366	V	2	0	M	F	DD	CC

For cams please check pages: 175 (Cam-3)

tel | +90 212 721 44 44 fax | +90 212 721 44 45

566 MINI QUARTER TURN – EASY FIXING

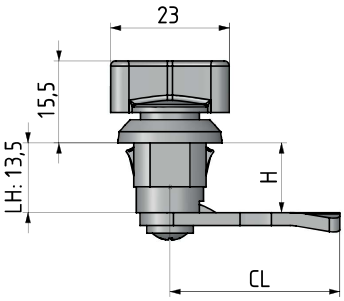

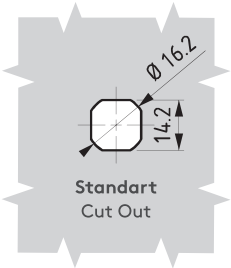

V: 1

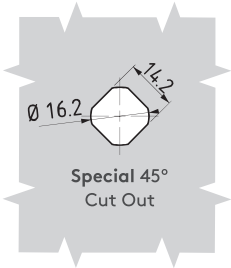

V: 2

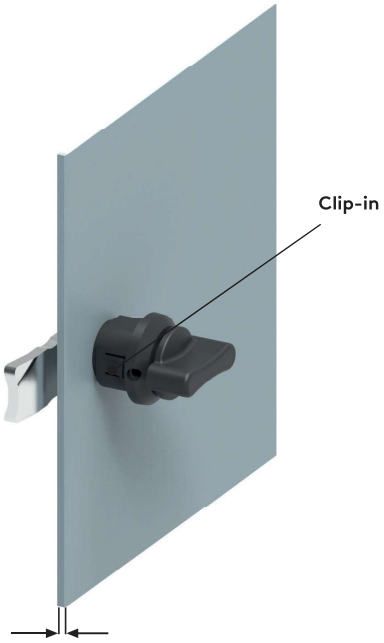

DT
Door Thickness:
0.8 mm - 1.2 mm

- Easy assembly by clips
- Specially designed internal spring provides 1 mm torsion

MATERIAL

HOUSING:	PA6 GFR 30
KNOB:	Zamak DIN-EN 1774-ZnAl4Cu1 or PA6 GFR 30
CAM:	Steel

MATERIAL	M	FINISH	F
Zamak	1	Chrome plated	1
		Black coated	2
Plastic	2	No finish	0

Group Code	Version	Housing		Knob		Cam
566	V	2	0	M	F	CC

For cams please check pages: 175 (Cam-3)

MINI QUARTER TURN – SPRING LOADED

066

RoHS

IP 65

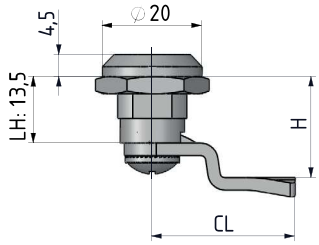

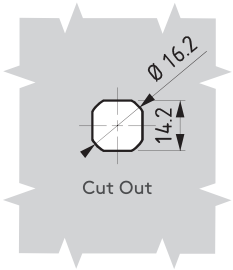

- **Stainless steel version: page 456**
- Specially designed internal spring provides 1 mm torsion
- Sealing washer not supplied

MATERIAL

HOUSING:	Zamak DIN-EN 1774-ZnAl4Cu1 or PA6 GFR 30
DRIVER:	Zamak DIN-EN 1774-ZnAl4Cu1 or PA6 GFR 30
CAM:	Steel

DRIVERS			
6 mm Square		M	F
DD		1	1
		1	2
26		2	0
7 mm Triangular		M	F
DD		1	1
		1	2
37		2	0
Slot		M	F
DD		1	1
		1	2
42		2	0

Application Keys
Code: 267

MATERIAL	M	FINISH	F
Zamak	1	Chrome plated	1
		Black coated	2
Plastic	2	No finish	0

Group Code	Housing		Driver		Driver	Cam	IP 65
066	M	F	M	F	DD	CC	*

*: add "1" for IP 65

For cams please check pages: 175 (Cam-3)

For keys please check page:191

tel | +90 212 721 44 44 fax | +90 212 721 44 45

266 MINI QUARTER TURN – SPRING LOADED

RoHS

IP 65

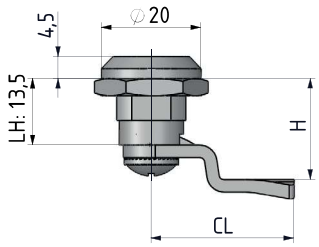

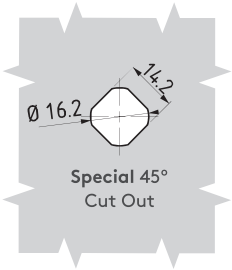

DRIVERS			
6 mm Square		M	F
DD		1	1
		1	2
26		2	0
7 mm Triangular		M	F
DD		1	1
		1	2
37		2	0
Slot		M	F
DD		1	1
		1	2
42		2	0

- **Stainless steel version: page 456**
- Specially designed internal spring provides 1 mm torsion
- Sealing washer not supplied

MATERIAL

HOUSING: Zamak DIN-EN 1774-ZnAl4Cu1 or PA6 GFR 30

DRIVER: Zamak DIN-EN 1774-ZnAl4Cu1 or PA6 GFR 30

CAM: Steel

MATERIAL	M	FINISH	F
Zamak	1	Chrome plated	1
		Black coated	2
Plastic	2	No finish	0

Group Code	Housing		Driver		Driver	Cam	IP 65
266	M	F	M	F	DD	CC	*

*: add "1" for IP 65

Application Keys
Code: 267

For cams please check pages: 175 (Cam-3)

For keys please check page:191

MINI QUARTER TURN – WING KNOB

166

RoHS

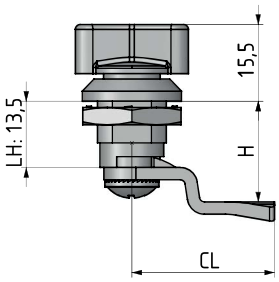

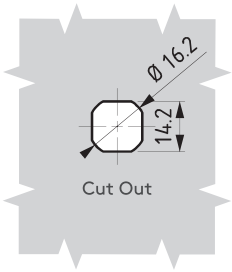

- Wing operates lock and serves as knob
- Sealing washer not supplied

MATERIAL

HOUSING:	Zamak DIN-EN 1774-ZnAl4Cu1 or PA6 GFR 30
KNOB:	Zamak DIN-EN 1774-ZnAl4Cu1 or PA6 GFR 30
CAM:	Steel

MATERIAL	M	FINISH	F
Zamak	1	Chrome plated	1
		Black coated	2
Plastic	2	No finish	0

Group Code	Housing		Knob		Cam
166	M	F	M	F	CC

For cams please check pages: 175 (Cam-3)

tel | +90 212 721 44 44 fax | +90 212 721 44 45

050 CAM LOCK – BALL

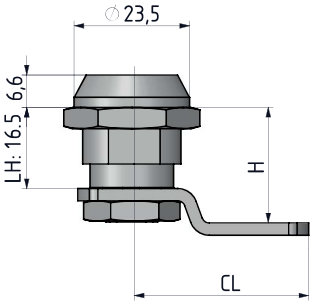

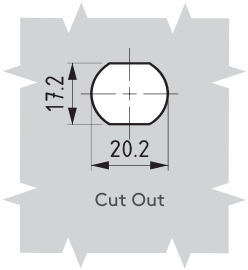

- Special index action to assist locking and keep cam in position
- Stable in open position

MATERIAL
HOUSING: Zamak DIN-EN 1774-ZnAl4Cu1
CAM: Steel

FINISH
Chrome plated

DRIVERS	
Slot	
DD 83	
9 mm Triangular	
DD 39	
6 mm hexagon	
DD 66	

Application keys:

267-39

669-66

MATERIAL	M	FINISH	F
Zamak	1	Chrome plated	1
		Black coated	2

Group Code	Material	Finish	Driver	Cam
050	1	F	DD	CC

For cams please check pages: 175 (Cam-2)

PADLOCKABLE – KNOB

055

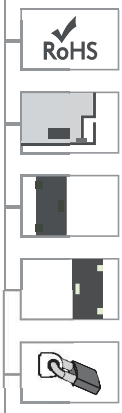

V:1

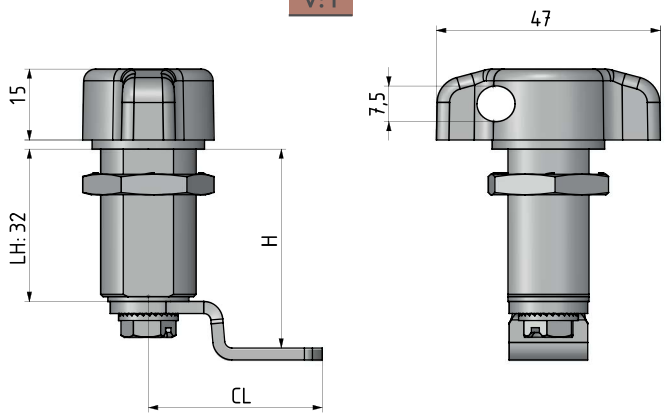

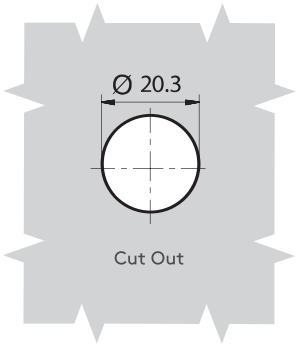

- Padlockable version
- Padlock shackle diameter
  Minimum 4 mm – Maximum 6 mm

MATERIAL

HOUSING:	Zamak DIN-EN 1774-ZnAl4Cu1
KNOB:	Zamak DIN-EN 1774-ZnAl4Cu1
CAM:	Steel

FINISH
Nickel Plated

Note: Not suitable to use with long-shackle padlocks.

Note: For ball application please contact Essentra Components

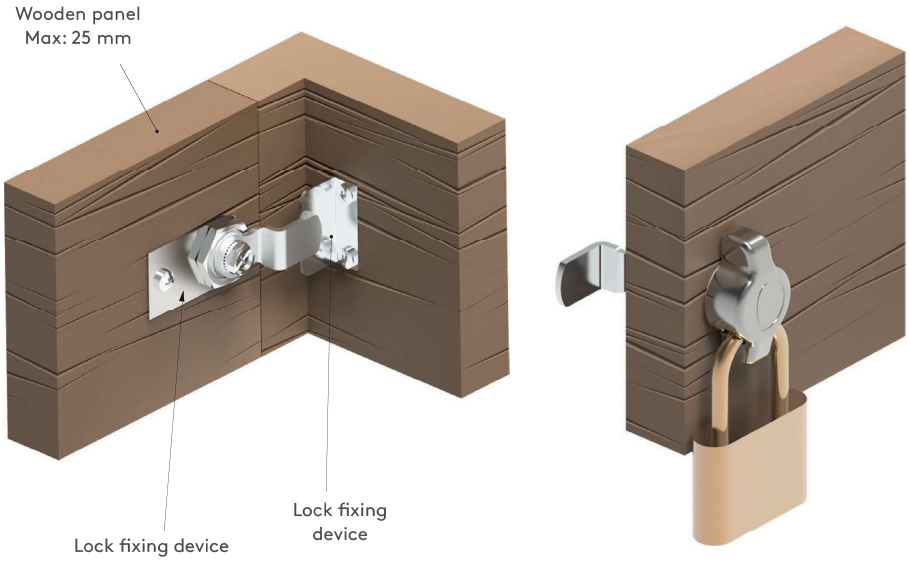

Group Code	Version	Cam	Door Direction
055	1	CC	

DOOR DIRECTION	
Right hand	001
Left hand	002

For cams please check pages: 175 (Cam-1)

tel | +90 212 721 44 44 fax | +90 212 721 44 45

055 PADLOCKABLE – KNOB

NEW

RoHS

V: 5

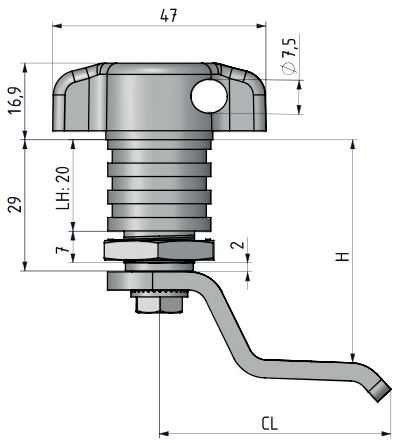

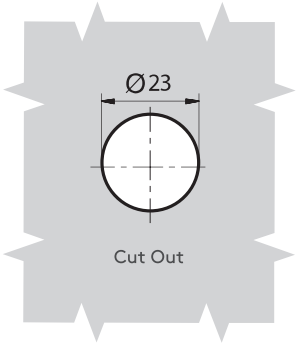

- Padlockable version
- Padlock shackle diameter Minimum 4 mm – Maximum 6 mm

MATERIAL

HOUSING:	Zamak DIN-EN 1774-ZnAl4Cu1
KNOB:	Zamak DIN-EN 1774-ZnAl4Cu1
CAM:	Steel

FINISH
Nickel Plated

Note: Not suitable to use with long-shackle padlocks.

Note: For different cams please contact Essentra Components

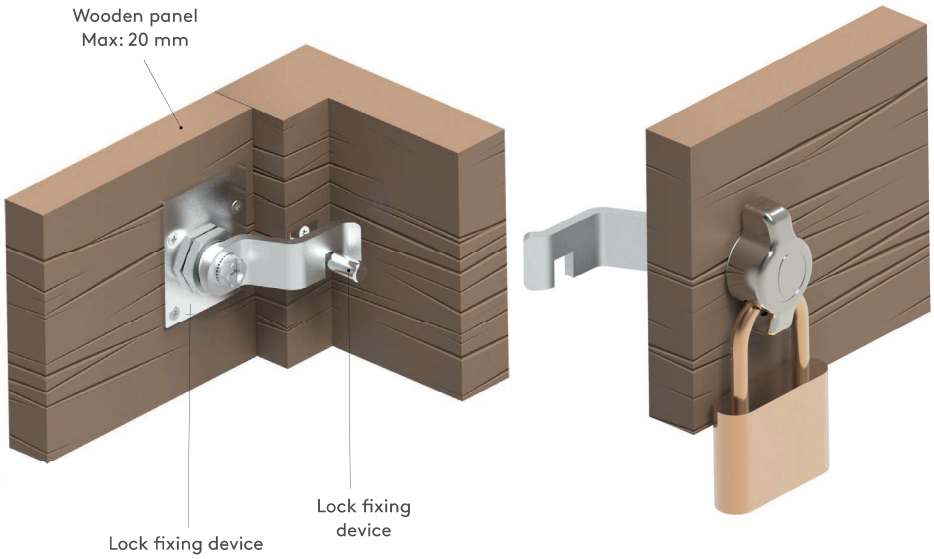

Group Code	Version	Cam	Door Direction
055	5	CC	

DOOR DIRECTION	
Right hand	001
Left hand	002

For cams please check pages: 175

PADLOCKABLE – KNOB

055

NEW

RoHS

- Easy assembly by clip
- Can be used for panel thickness 0.8 to 1.2 mm
- Padlockable version
- Padlock shackle diameter Minimum 4 mm – Maximum 6 mm

MATERIAL

HOUSING: Zamak DIN-EN 1774-ZnAl4Cu1

KNOB: Zamak DIN-EN 1774-ZnAl4Cu1

CAM: Steel

FINISH

Nickel Plated

Note: Not suitable to use with long-shackle padlocks.

Note: For ball application please contact Essentra Components

V: 4

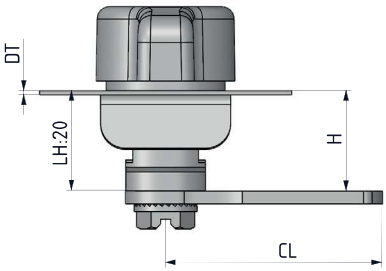

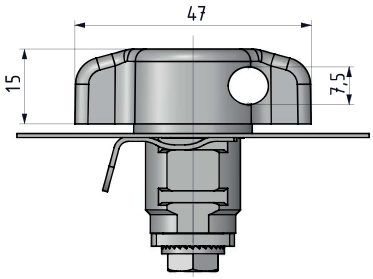

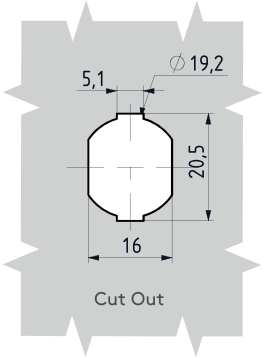

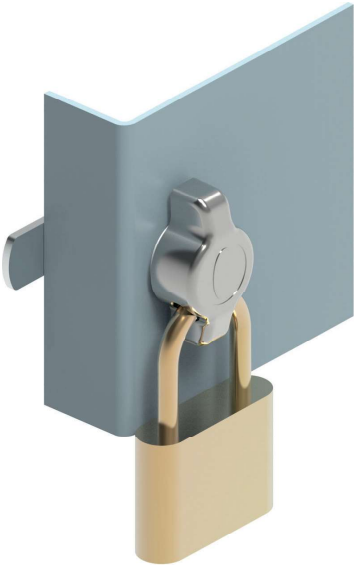

Group Code	Version	Cam	Door Direction
055	4	CC	

DOOR DIRECTION	
Right hand	001
Left hand	002

For cams please check pages: 175 (Cam-1)

tel | +90 212 721 44 44 fax | +90 212 721 44 45

055 PADLOCKABLE – KNOB

V: 3

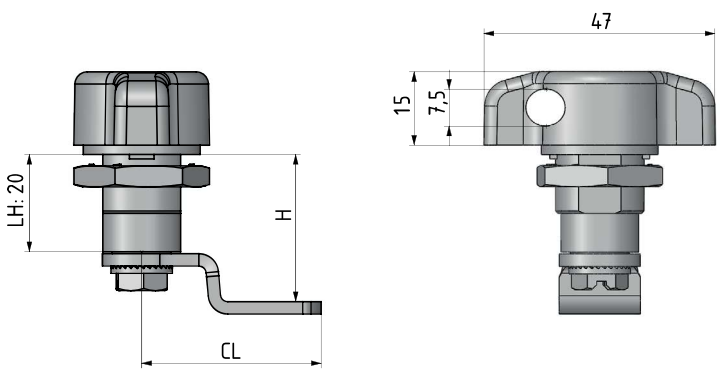

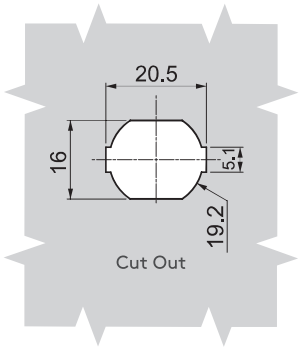

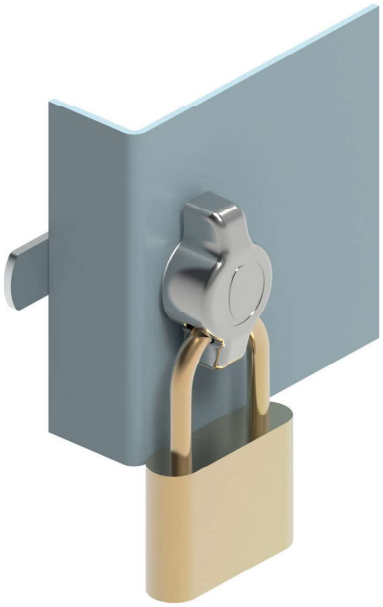

- Padlockable version
- Padlock shackle diameter
  Minimum 4 mm – Maximum 6 mm

MATERIAL

HOUSING:	Zamak DIN-EN 1774-ZnAl4Cu1
KNOB:	Zamak DIN-EN 1774-ZnAl4Cu1
CAM:	Steel

FINISH
Nickel Plated

Note: Not suitable to use with long-shackle padlocks.

Note: For ball application please contact Essentra Components

Group Code	Version	Cam	Door Direction
055	3	CC	

DOOR DIRECTION	
Right hand	001
Left hand	002

For cams please check pages: 175 (Cam-1)

QUARTER TURN – SPRING LOADED

350

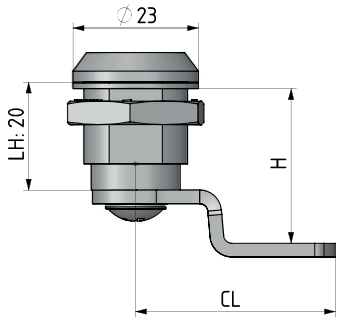

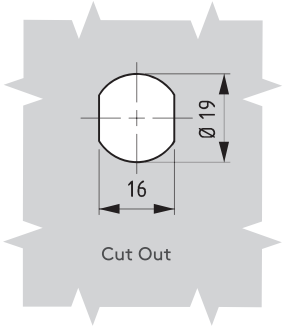

- Vibration proof quarter turn
- Opening the lock only possible by pushing and rotating the driver by the key
- Nickel plating is an option

MATERIAL

HOUSING:	Zamak DIN-EN 1774-ZnAl4Cu1
DRIVER:	Zamak DIN-EN 1774-ZnAl4Cu1
NUT:	Zamak DIN-EN 1774-ZnAl4Cu1
CAM:	Steel

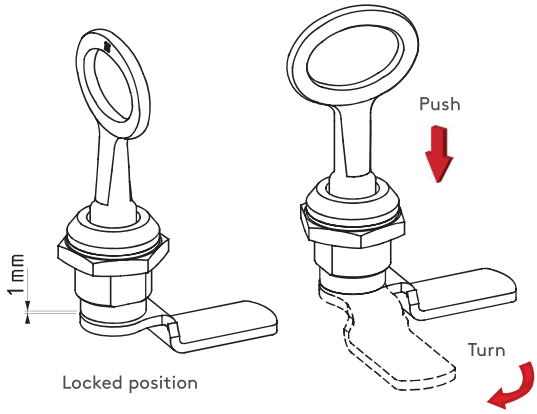

DRIVERS

		M	F
3 mm Double Bit			
DD 13		1	1
		1	2
		1	4
7 mm Triangular		1	1
DD 37		1	1
		1	2
		1	4
7 mm Square			
DD 27		1	1
		1	2
		1	4
Slot			
DD 42		1	1
		1	2
		1	4

DUST CAP

050 A4

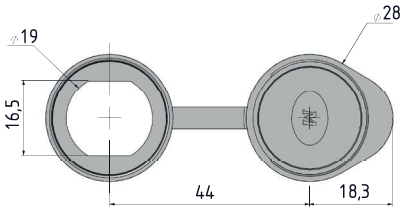

MATERIAL	M	FINISH	F
Zamak	1	Chrome plated	1
		Black coated	2
		Nikel kaplama	4

Group Code	Material	Finish	Driver No	Cam
350	1	F	DD	CC

For cams please check pages: 175 (Cam-1)
For keys please check page:191

tel | +90 212 721 44 44 fax | +90 212 721 44 45

055 CABINET LOCK

NEW

RoHS

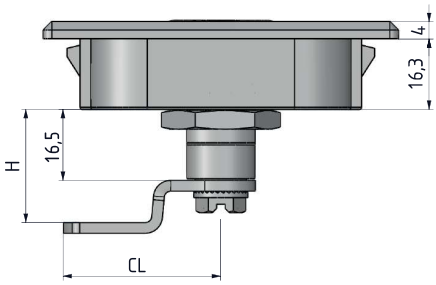

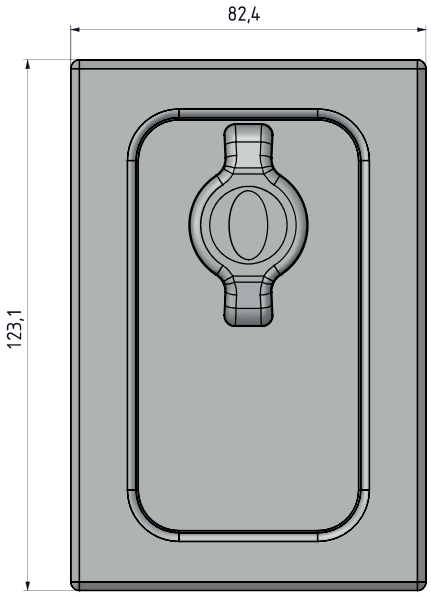

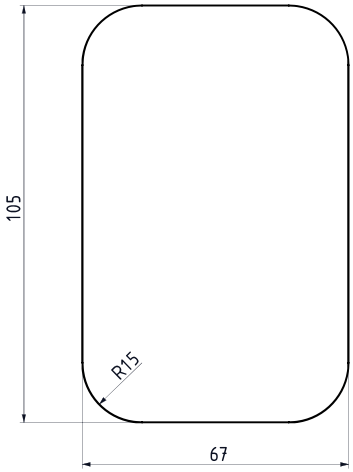

Cut Out

MATERIAL

BODY:	PA6 GFR 30
KNOB:	Zamak DIN-EN 1774-ZnAl4Cu1 or PA6 GFR 30
CAM:	Steel

FINISH

Body: Nickel Plated

Group Code	Version	Cam	Door Direction
055	6	CC	

DOOR DIRECTION	
Right hand	001
Left hand	002

For cams please check pages: 175 (Cam-1)

QUARTER-TURN LOCK

666

NEW

RoHS

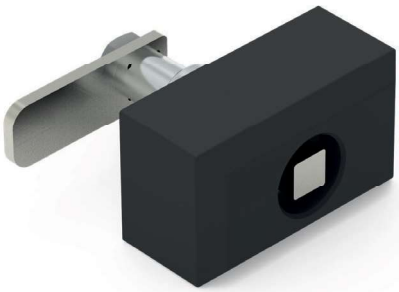

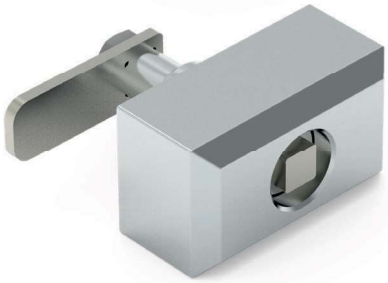

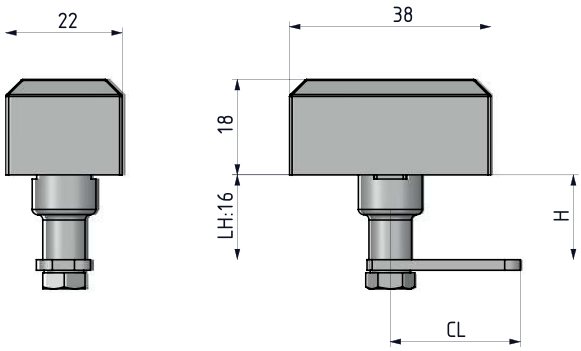

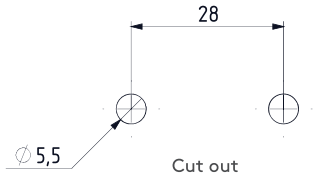

MATERIAL

BODY:	Zamak DIN-EN 1774-ZnAl4Cu1
DRIVER:	Stainless Steel
CAM:	Stainless Steel

FINISH

Chrome plated or Black coated

.

MATERIAL	M	FINISH	F
Zamak	1	Chrome plated	1
		Black coated	2
Stainless Steel	4	No finish	0

Group Code	Housing		Driver		Driver No	Cam
666	1	F	4	0	DD	CC

For cams please check pages: 458

For drivers please check pages: 194

tel | +90 212 721 44 44 fax | +90 212 721 44 45

203

QUARTER TURN – WING KNOB

V: 6

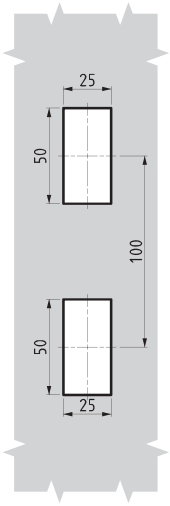

Cut Out

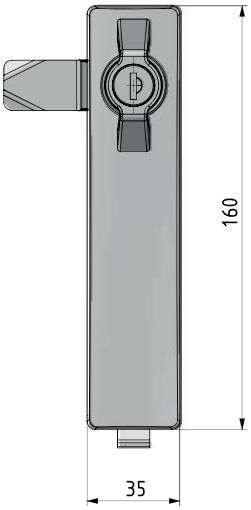

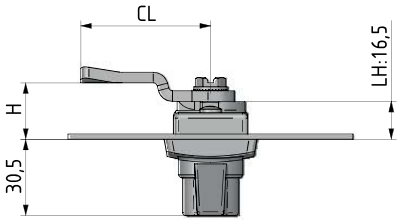

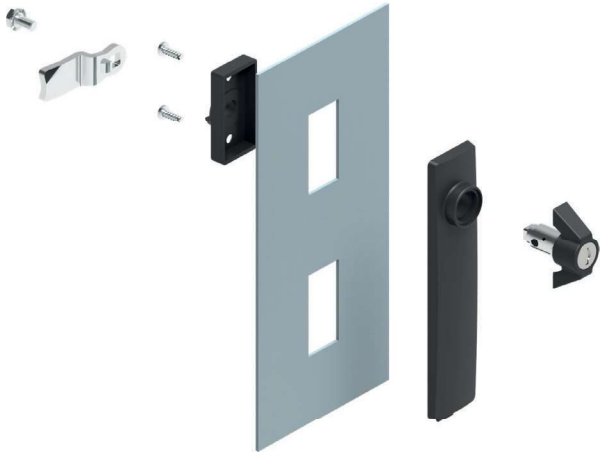

IP 54

RoHS

MATERIAL

BODY:	PA6 GFR 30
KNOB:	Zamak DIN-EN 1774-ZnAl4Cu1 or PA6 GFR 30
CAM:	Steel
GASKET:	Polyurethane

CYLINDER	SPECIFICATIONS	DD
	No cylinder	00
	Keyed alike	01
	Keyed differ	02
	Euro key (5333)	05
	CH751 (Stainless steel dust cap)	07

Group Code	Version	Cylinder	Cam
203	6	DD	CC

For cams please check pages: 170 - 171

QUARTER-TURN LOCK 103

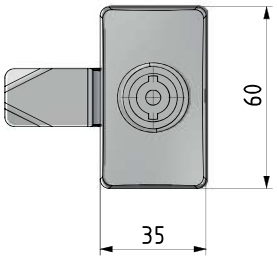

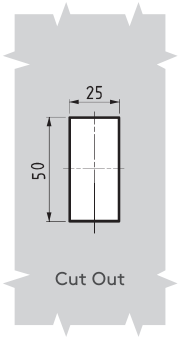

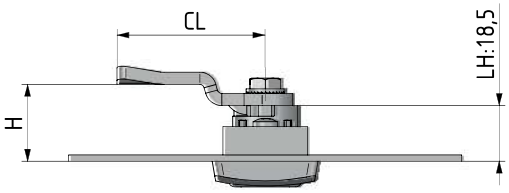

MATERIAL

BODY:	PA6 GFR 30
DRIVER:	Zamak DIN-EN 1774-ZnAl4Cu1 or PA6 GFR 30
CAM:	Steel
GASKET:	Polyurethane

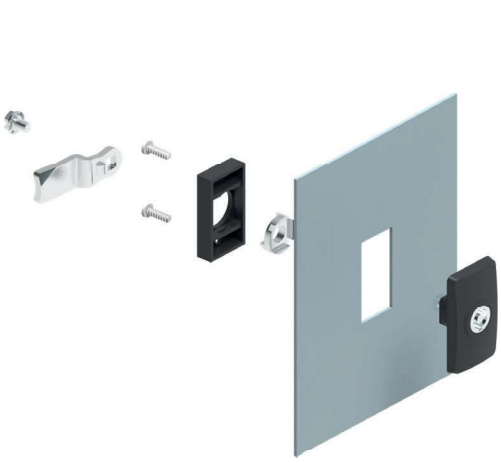

DT	
Min	Max
0.8 mm	1.8 mm

V: 1

Wih cover fix

V: 6

Clips to fix

MATERIAL	M	FINISH	F
Zamak	1	Chrome plated	1
		Black coated	2

Group Code	Version	Driver		Driver No	Cam
103	V	M	F	DD	CC

For cams please check pages: 170 - 171
For drivers please check page: 194
For keys please check pages: 189 - 191

tel | +90 212 721 44 44 fax | +90 212 721 44 45

203 QUARTER-TURN LOCK

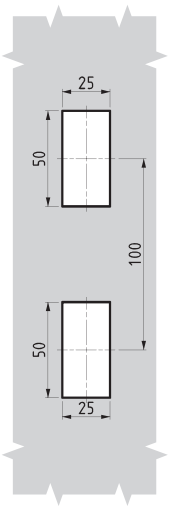

Cut Out

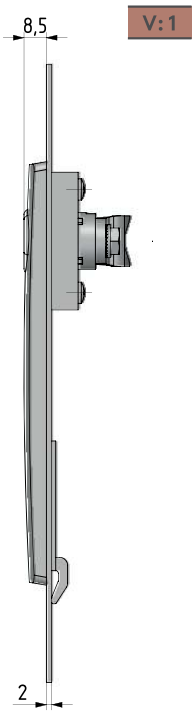

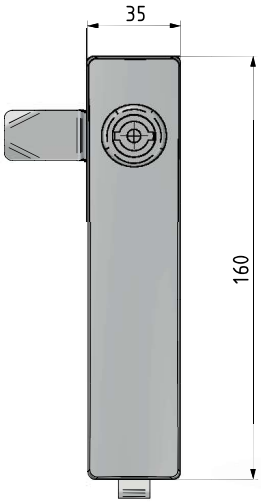

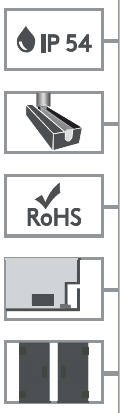

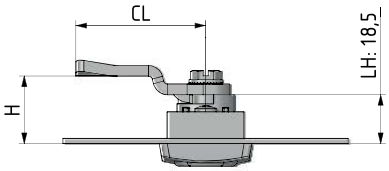

MATERIAL

BODY:	PA6 GFR 30
DRIVER:	Zamak DIN-EN 1774-ZnAl4Cu1 or PA6 GFR 30
CAM:	Steel
GASKET:	Polyurethane

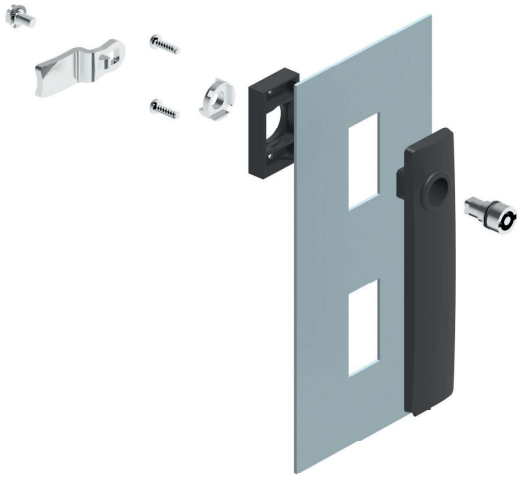

MATERIAL	M	FINISH	F
Zamak	1	Chrome plated	1
		Black coated	2

Group Code	Version	Driver		Driver No	Cam
203	1	M	F	DD	CC

For cams please check pages: 170 - 171
For drivers please check page: 194
For keys please check pages: 189 - 191

FAST FIND INDEX

248

249

250

251

252

253

254

255

256

257

258

259

260

261

262

263

264

264

265

266

267

268

269

270

271

CAM LOCKS

246-271

mesan
ESSENTRA COMPONENTS

e-mail | info@mesanlocks.com web | www.mesanlocks.com

SPRING CAM LOCK

163

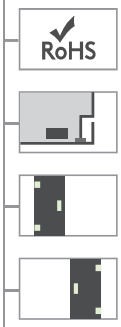

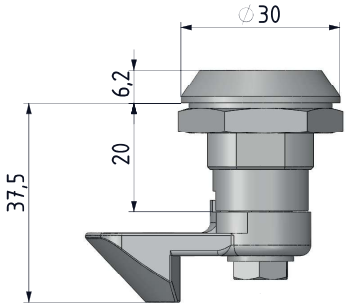

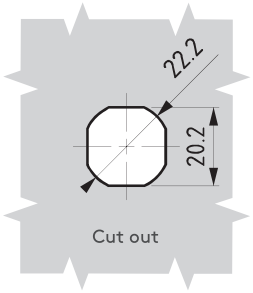

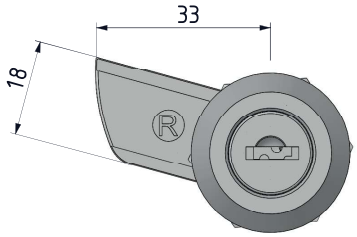

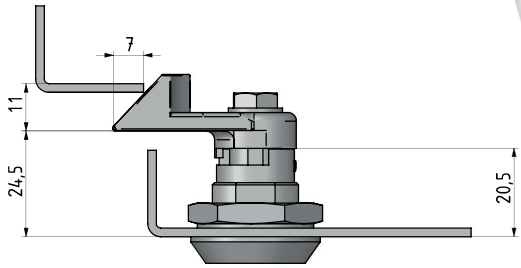

- Spring-loaded cam provides depress-to-lock action
- Distance between inside of lock face and front of cam fixed at 24 mm
- There is no IP 65 version of this lock,due to spring loaded cam

APPLICATIONS
Electric panels, machinery covers

MATERIAL

HOUSING:	Zamak DIN-EN 1774-ZnAl4Cu1
CYLINDER:	Zamak DIN-EN 1774-ZnAl4Cu11
CAM:	Steel
GASKET:	Rubber

MATERIAL	M	FINISH	F
Zamak	1	Chrome plated	1
		Black coated	2

DOOR DIRECTION	
Right hand	001
Left hand	002

	CYLINDER	DD
	Keyed alike (Stainless steel dust cap)	03
	Keyed differ (Stainless steel dust cap)	32
	Master System	04
	Euro key (5333)	05
	CH751 (Stainless steel dust cap	07

Group Code	Material	Finish	Cylinder	Door Direction
163	1	F	DD	

tel | +90 212 721 44 44 fax | +90 212 721 44 45

063

CAM LOCK

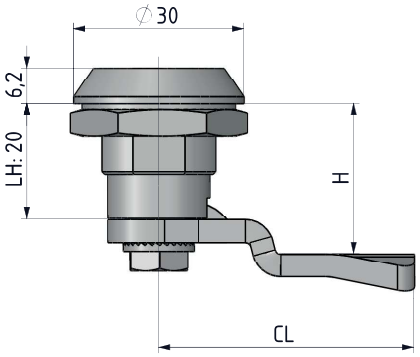

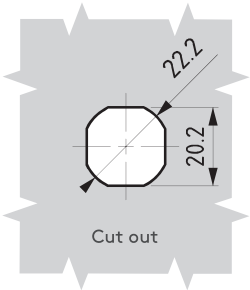

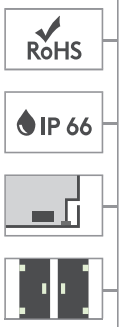

- **Stainless steel version: page 476**
- Quarter-turn operation
- Body length 20.5 mm (Please be sure to order appropriate cam)
- Available in all die-cast zinc alloy or with polyamide housing

MATERIAL

HOUSING:	Zamak DIN-EN 1774-ZnAl4Cu1 or PA6 GFR 30
CAM:	Steel or Plastic
GASKET:	Rubber

MATERIAL	M	FINISH	F
Zamak	1	Chrome plated	1
		Black coated	2
Plastic	2	No finish	0

	CYLINDER	DD
	Keyed alike (Stainless steel dust cap)	03
	Keyed differ (Stainless steel dust cap)	32
	Master System	04
	Euro key (5333)	05
	CH751 (Stainless steel dust cap	07

Group Code	Material	Finish	Cylinder	Cam
063	M	F	DD	CC

For cams please check pages: 170 - 171

CAM LOCK – EASY FIXING

761

NEW

RoHS

IP 65

- Easy assembly by plastic clips
- Applicable on different panel thicknesses
- Standard cut out

MATERIAL

HOUSING: Polyamide DIN-EN ISO 1043-1 PA6 GFR 30

CAM: Plastic or steel

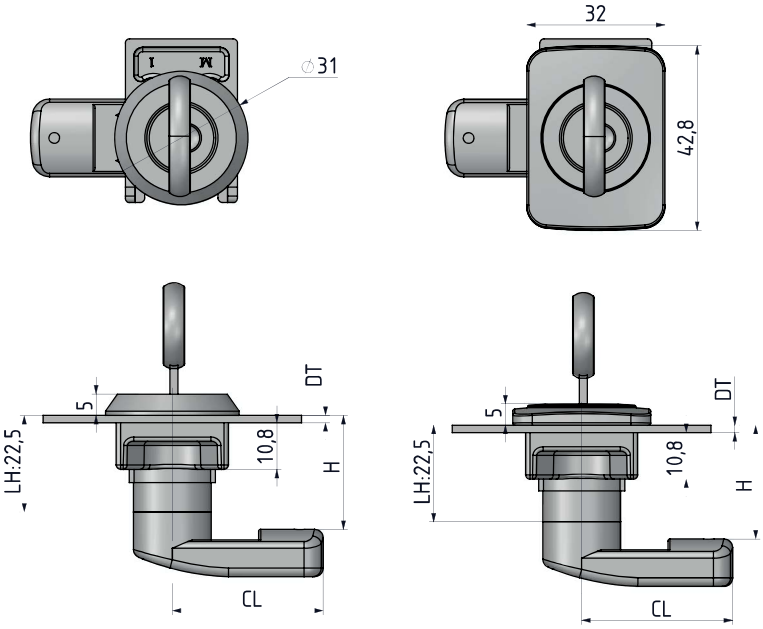

V: 1

V: 2

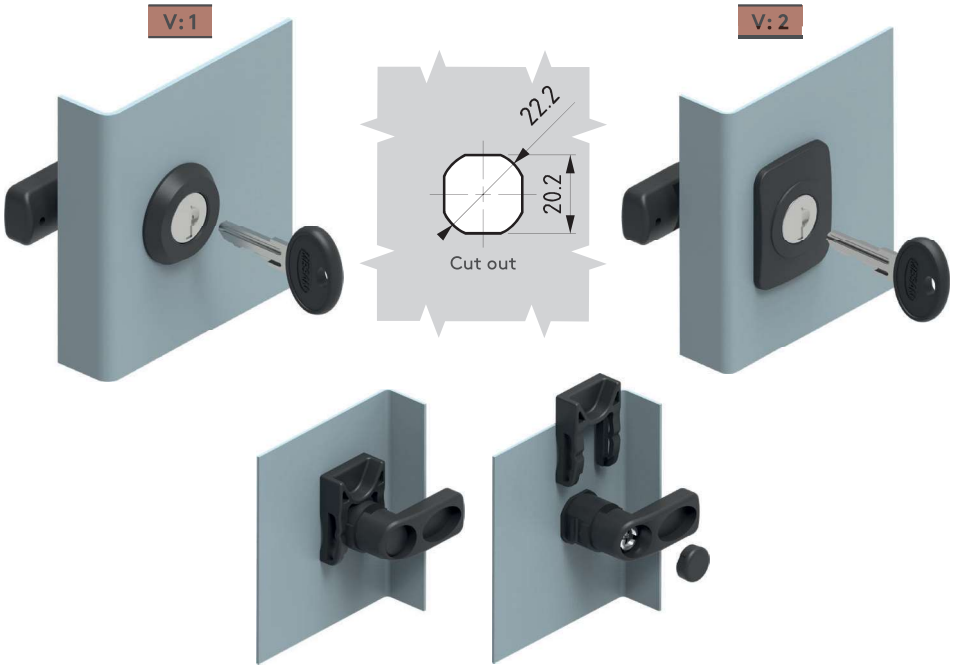

320.02.221

BOLT COVER (For grounding)

- Can order separately (only for plastic cams)

DOOR THICKNESS	DT
1.2 -1.8 mm panel	12
1.8 -2.3 mm panel	23

CYLINDER	DD
Keyed alike (Stainless steel dust cap)	03
Keyed differ (Stainless steel dust cap)	32
Master System	04
Euro key (5333)	05
CH751 (Stainless steel dust cap	07

Group Code	Version	Housing		Cylinder	Door Thickness	Cam
761	V	2	0	DD	DT	CC

For cams please check pages: 170 - 171

tel | +90 212 721 44 44 fax | +90 212 721 44 45

261 KNOB LOCK

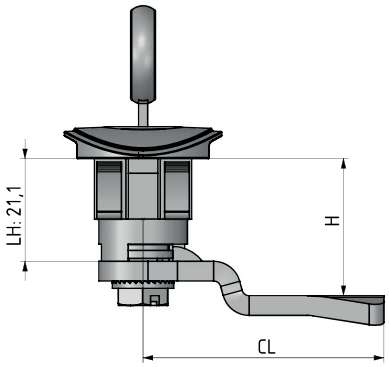

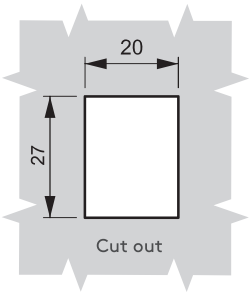

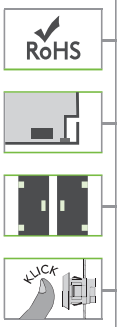

- Clip fixing for easy assembly
- Mounting nut not required
- Special 20 mm x 26 mm cut out
- No IP 65 version of this lock
- 1.8 mm maximum panel thickness

MATERIAL

HOUSING: Polyamide DIN-EN ISO 1043-1 PA6 GFR 30

CAM: Steel or plastic

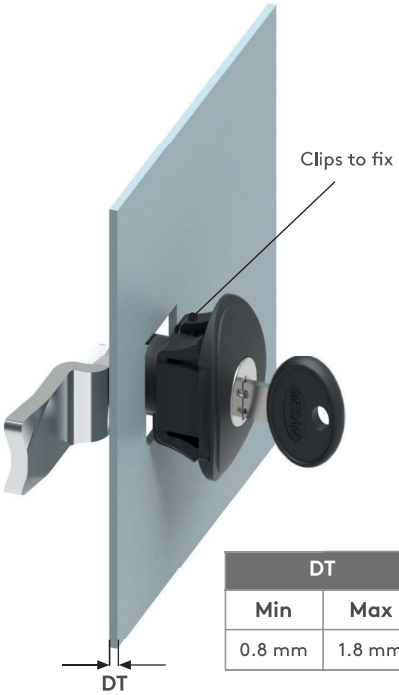

DT	
Min	Max
0.8 mm	1.8 mm

	CYLINDER	DD
	Keyed alike (Stainless steel dust cap)	03
	Keyed differ (Stainless steel dust cap)	32
	Master System	04
	Euro key (5333)	05
	CH751 (Stainless steel dust cap	07

Group Code	Material	Finish	Cylinder	Cam
261	2	0	DD	CC

For cams please check pages: 170 - 171

CAM LOCK – WING KNOB

065

RoHS

IP 65

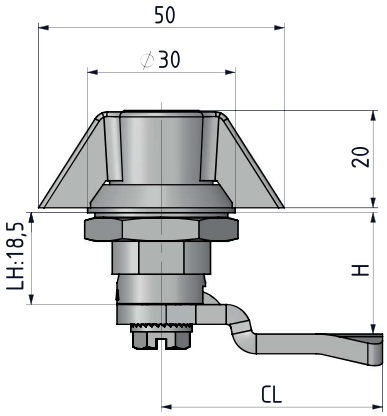

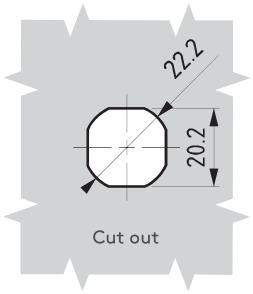

- **Stainless steel version: page 474**
- Quarter-turn operation
- Available in all die-cast zinc alloy or with polyamide wing knob and housing
- Optional blind version

MATERIAL

HOUSING:	Zamak DIN-EN 1774-ZnAl4Cu1
CAM:	Steel or Plastic
GASKET:	Rubber

No cylinder '00'

MATERIAL	M	FINISH	F
Zamak	1	Chrome plated	1
		Black coated	2
Plastic	2	No finish	0

	CYLINDER	DD
	No cylinder	00
	Keyed alike (Stainless steel dust cap)	03
	Keyed differ (Stainless steel dust cap)	32
	Master System	04
	Euro key (5333)	05
	CH751 (Stainless steel dust cap	07

Group Code	Material	Finish	Cylinder	Cam
065	M	F	DD	CC

For cams please check pages: 170 - 171

tel | +90 212 721 44 44 fax | +90 212 721 44 45

165 MINI CAM LOCK – WING KNOB

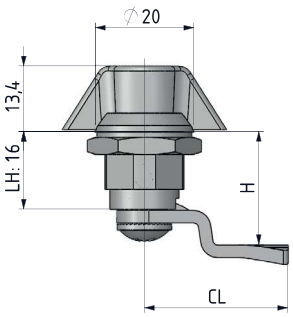

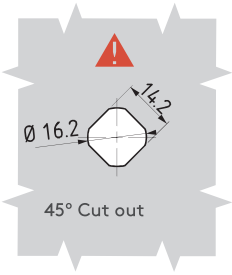

- Quarter-turn operation
- Available all die-cast zinc alloy
- Suitable for small cabinets

MATERIAL

HOUSING: Zamak DIN-EN 1774-ZnAl4Cu1
KNOB: Zamak DIN-EN 1774-ZnAl4Cu1
CAM: Steel

MATERIAL	M	FINISH	F
Zamak	1	Chrome plated	1
		Black coated	2

	CYLINDER	DD
	Keyed alike (Stainless steel dust cap)	03
	Keyed differ (Stainless steel dust cap)	32

Group Code	Material	Finish	Cylinder	Cam
165	1	F	DD	CC

For cams please check page: 175

CAM LOCK – T HANDLE

110

RoHS

IP 65

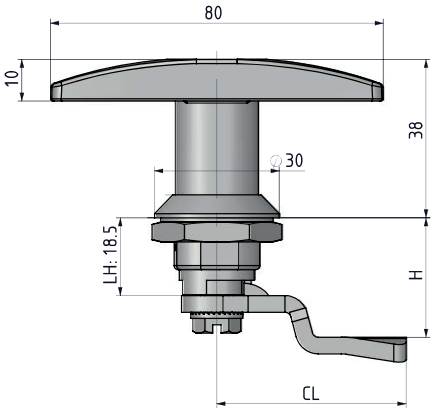

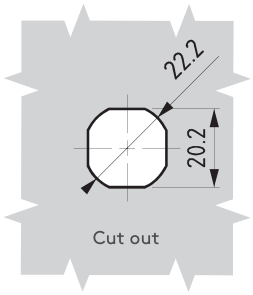

- **Stainless steel version: page 472**
- Quarter-turn operation
- Available in all die-cast zinc alloy or with polyamide wing handle and housing
- Optional blind version

MATERIAL

HANDLE:	Zamak DIN-EN 1774-ZnAl4Cu1 or PA6
HOUSING:	Zamak DIN-EN 1774-ZnAl4Cu1
CAM:	Steel or Plastic
GASKET:	Rubber

MATERIAL	M	FINISH	F
Zamak	1	Chrome plated	1
		Black coated	2
Plastic	2	No finish	0

	CYLINDER	DD
	No cylinder	00
	Keyed alike (Stainless steel dust cap)	03
	Keyed differ (Stainless steel dust cap)	32
	Euro key (5333)	05
	CH751 (Stainless steel dust cap	07

Group Code	Material	Finish	Cylinder	Cam
110	M	F	DD	CC

For cams please check pages: 170 - 171

tel | +90 212 721 44 44 fax | +90 212 721 44 45

111 CAM LOCK – L HANDLE

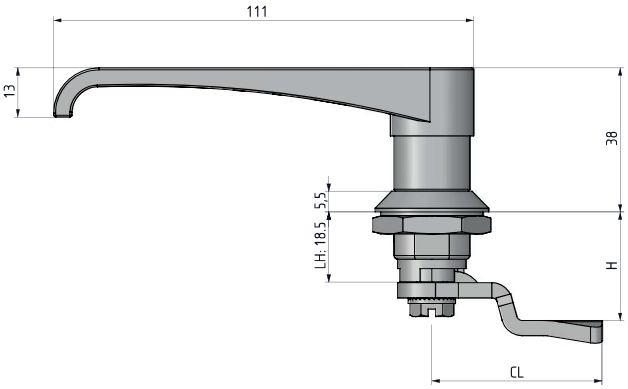

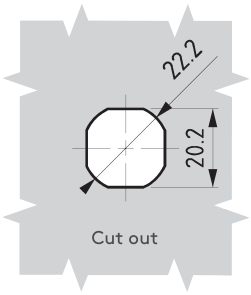

- **Stainless steel version: page 473**
- Quarter-turn operation
- Available in all die-cast zinc alloy or with polyamide wing handle and housing
- Optional blind version

MATERIAL

HANDLE:	Zamak DIN-EN 1774-ZnAl4Cu1 or PA6
HOUSING:	Zamak DIN-EN 1774-ZnAl4Cu1
CAM:	Steel or Plastic
GASKET:	Rubber

MATERIAL	M	FINISH	F
Zamak	1	Chrome plated	1
		Black coated	2
Plastic	2	No finish	0

	CYLINDER	DD
	No cylinder	00
	Keyed alike (Stainless steel dust cap)	03
	Keyed differ (Stainless steel dust cap)	32
	Euro key (5333)	05
	CH751 (Stainless steel dust cap	07

Group Code	Material	Finish	Cylinder	Cam
111	M	F	DD	CC

For cams please check pages: 170 - 171

CAM LOCK – T HANDLE

064

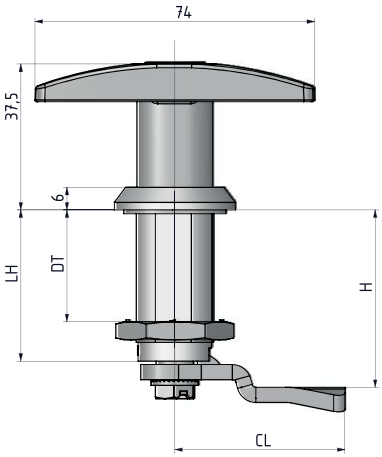

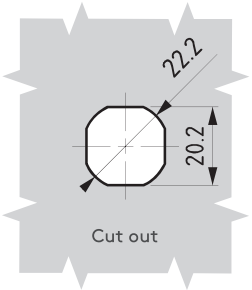

- Quarter-turn operation
- Available in all die-cast zinc alloy or with polyamide wing handle and housing
- Optional blind version

MATERIAL

HANDLE:	Zamak DIN-EN 1774-ZnAl4Cu1 or PA6
HOUSING:	Zamak DIN-EN 1774-ZnAl4Cu1
CAM:	Steel or Plastic
GASKET:	Rubber

DT	LH
20	30
30	40
40	50
50	60

MATERIAL	M	FINISH	F
Zamak	1	Chrome plated	1
		Black coated	2
Plastic	2	No finish	0

	CYLINDER	DD
	No cylinder	00
	Keyed alike (Stainless steel dust cap)	03
	Keyed differ (Stainless steel dust cap)	32
	Euro key (5333)	05
	CH751 (Stainless steel dust cap	07

Group Code	Handle	Door Thickness	Material	Finish	Cylinder	Cam
064	110	DT	M	F	DD	CC

For cams please check pages: 170 - 171

tel | +90 212 721 44 44 fax | +90 212 721 44 45

064 CAM LOCK – L HANDLE

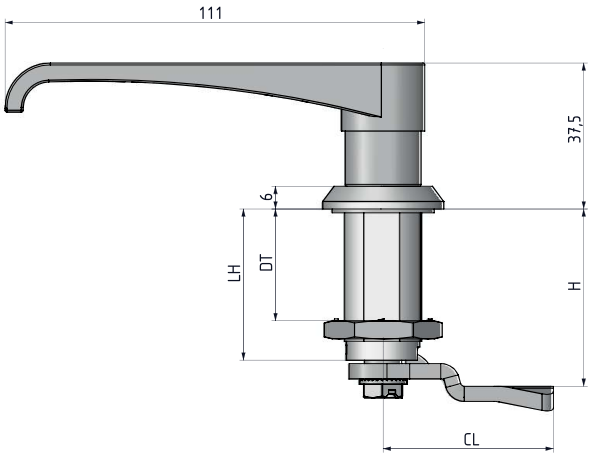

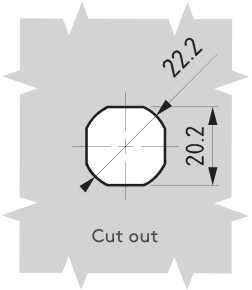

DT	LH
20	30
30	40
40	50
50	60

- Quarter-turn operation
- Available in all die-cast zinc alloy or with polyamide wing handle and housing
- Optional blind version

MATERIAL

HANDLE:	Zamak DIN-EN 1774-ZnAl4Cu1 or PA6
HOUSING:	Zamak DIN-EN 1774-ZnAl4Cu1
CAM:	Steel or Plastic
GASKET:	Rubber

MATERIAL	M	FINISH	F
Zamak	1	Chrome plated	1
		Black coated	2
Plastic	2	No finish	0

CYLINDER	DD
No cylinder	00
Keyed alike (Stainless steel dust cap)	03
Keyed differ (Stainless steel dust cap)	32
Euro key (5333)	05
CH751 (Stainless steel dust cap	07

Group Code	Handle	Door Thickness	Material	Finish	Cylinder	Cam
064	111	DT	M	F	DD	CC

For cams please check pages: 170 - 171

COMPRESSION LOCK – T HANDLE

240

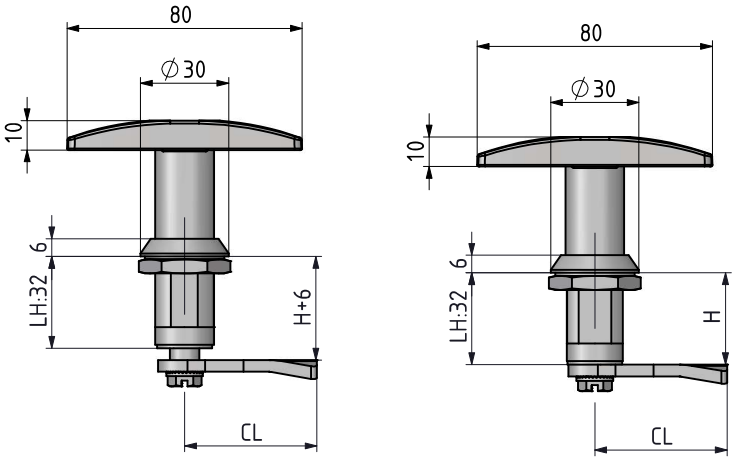

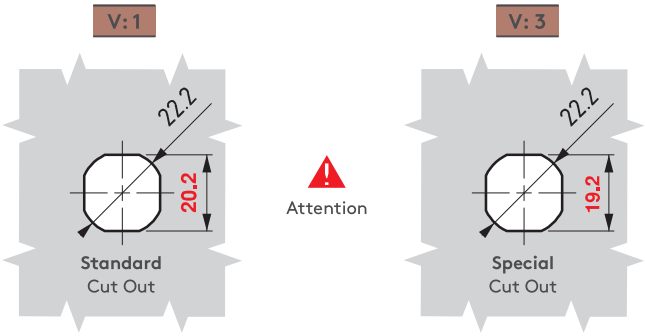

- Used for cabinets require better sealing under vibrating conditions
- Provides 6 mm of compression
- Provides noise isolation
- Standard cams without stopper required for these locks

MATERIAL

HOUSING:	Zamak DIN-EN 1774-ZnAl4Cu1
HANDLE:	Zamak DIN-EN 1774-ZnAl4Cu1
CAM:	Steel
GASKET:	Rubber

FINISH

Chrome or black coated

MATERIAL	M	FINISH	F
Zamak	1	Chrome plated	1
		Black coated	2

	CYLINDER	DD
	No cylinder	00
	Keyed alike (Stainless steel dust cap)	03
	Keyed differ (Stainless steel dust cap)	32
	CH751 (Stainless steel dust cap	07

Group Code	Version	Material	Finish	Cylinder	Cam
240	V	1	F	DD	CC

For cams please check page:: 172 - 173

tel | +90 212 721 44 44 fax | +90 212 721 44 45

240 COMPRESSION LOCK – T HANDLE

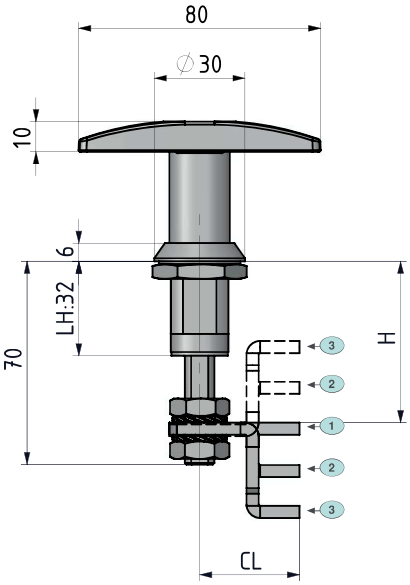

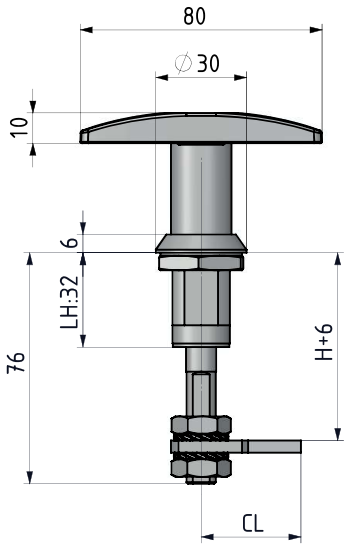

CAM	STOCK CODE	CC	CH	CL	POSITION	H: GRIP MIN	H: GRIP MAX
1	30403565Y	01	0	33	Flat	41	58
2	30403566Y	02	14	33	Up	27	44
					Down	55	72
3	30403567Y	03	27,5	33	Up	13,5	30,5
					Down	68	85

V: 2

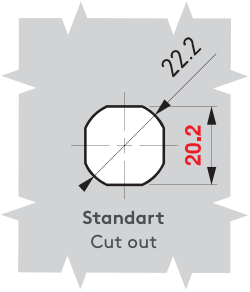

Standart
Cut out

Attention

V: 4

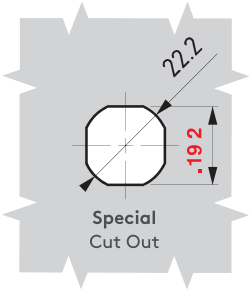

Special
Cut Out

- For the cabinets that require better sealing under vibrating conditions
- Provides 6 mm of compression
- Wide grip range with adjustable screw
- Provides noise isolation
- Three cam alternatives available

MATERIAL

HOUSING: Zamak DIN-EN 1774-ZnAl4Cu1
HANDLE: Zamak DIN-EN 1774-ZnAl4Cu1
CAM: Steel
GASKET: Rubber

FINISH

Chrome or black coated

MATERIAL	M	FINISH	F
Zamak	1	Chrome plated	1
		Black coated	2

	CYLINDER	DD
	No cylinder	00
	Keyed alike (Stainless steel dust cap)	03
	Keyed differ (Stainless steel dust cap)	32
	CH751 (Stainless steel dust cap	07

Group Code	Version	Material	Finish	Cylinder	Cam
240	V	1	F	DD	CC

FIXING DEVICE

- Can be ordered separately
ORDER CODE: 060 A3.

COMPRESSION LOCK – WING KNOB

340

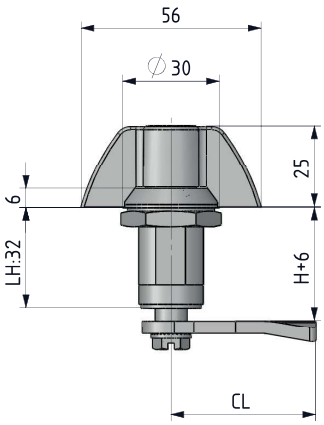

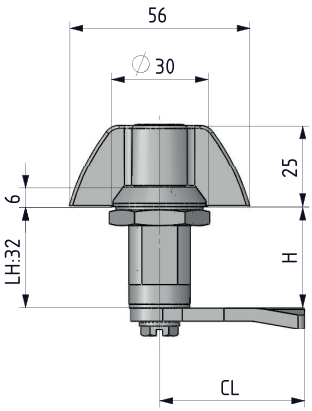

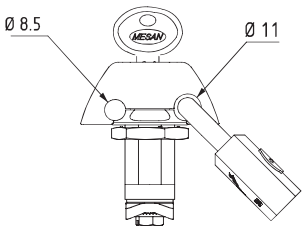

Padlock application

- Used for cabinets that require better sealing under vibrating conditions
- Provides 6 mm of compression
- Provides noise isolation
- Standard cams without stopper required for these locks
- Shackle diameter is
  for 11 mm hole: min. 8.5 mm
  max. 10 mm
  for 8.5 mm hole:
  min. 6 mm
  max. 7.5 mm

MATERIAL

HOUSING:	Zamak DIN-EN 1774-ZnAl4Cu1
KNOB:	Zamak DIN-EN 1774-ZnAl4Cu1
CAM:	Steel
GASKET:	Rubber

FINISH
Chrome or black coated

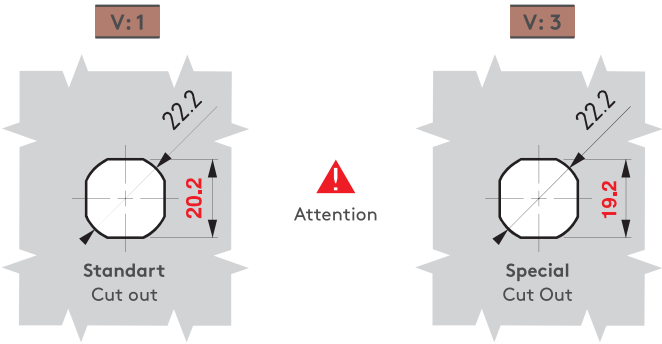

MATERIAL	M	FINISH	F
Zamak	1	Chrome plated	1
		Black coated	2

CYLINDER	DD
No cylinder	00
Keyed alike (Stainless steel dust cap)	03
Keyed differ (Stainless steel dust cap)	32
CH751 (Stainless steel dust cap	07

Group Code	Version	Material	Finish	Cylinder	Cam	Padlock *
340	V	1	F	DD	CC	

*: add "1" for padlock application.

For cams please check page:: 172 - 173

tel | +90 212 721 44 44 fax | +90 212 721 44 45

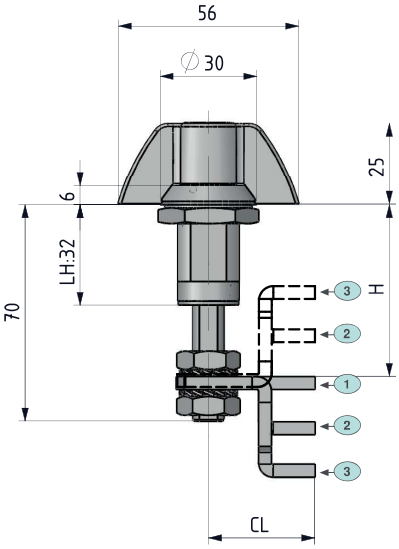

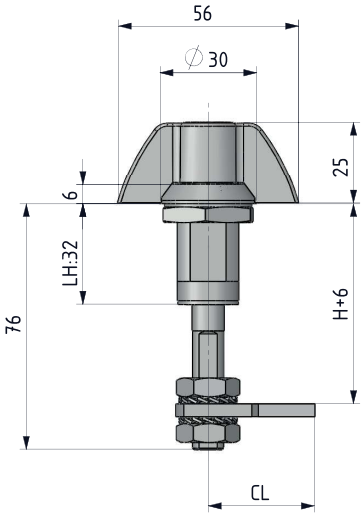

340

COMPRESSION LOCK – WING KNOB

- For the cabinets that require better sealing under vibrating conditions
- Lock provides 6 mm of compression
- Wide grip range with adjustable screw
- Provides noise isolation
- Three cam alternatives available
- Shackle diameter is
  for 11 mm hole:
  min. 8.5 mm
  max. 10 mm
  for 8.5 mm hole:
  min. 6 mm
  max. 7.5 mm

CAM	STOCK CODE	CC	CH	CL	POSITION	H: GRIP MIN	H: GRIP MAX
1	30403565Y	01	0	33	Flat	41	58
2	30403566Y	02	14	33	Up	27	44
					Down	55	72
3	30403567Y	03	27,5	33	Up	13,5	30,5
					Down	68	85

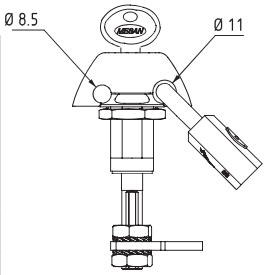

Padlock application

V: 2

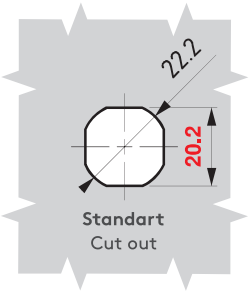

Standart
Cut out

Attention

V: 4

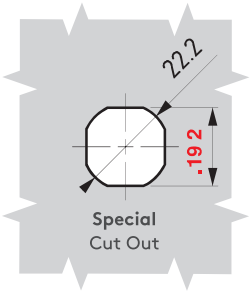

Special
Cut Out

MATERIAL

HOUSING:	Zamak DIN-EN 1774-ZnAl4Cu1
KNOB:	Zamak DIN-EN 1774-ZnAl4Cu1
CAM:	Steel
GASKET:	Rubber

FINISH
Chrome or black coated

MATERIAL	M	FINISH	F
Zamak	1	Chrome plated	1
		Black coated	2

	CYLINDER	DD
	No cylinder	00
	Keyed alike (Stainless steel dust cap)	03
	Keyed differ (Stainless steel dust cap)	32
	CH751 (Stainless steel dust cap	07

Group Code	Version	Material	Finish	Cylinder	Cam	Padlock *
340	V	1	F	DD	CC	

*: add "1" for padlock application.

FIXING DEVICE

- Can be ordered separately
  ORDER CODE: 060 A3.

CAM LOCK

050

RoHS

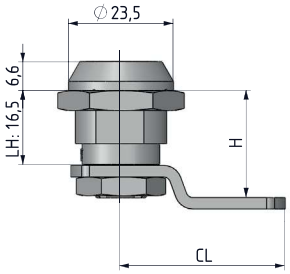

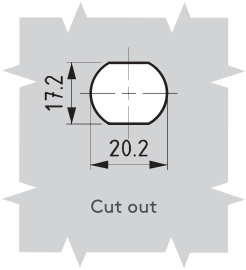

MATERIAL
HOUSING: Zamak DIN-EN 1774-ZnAl4Cu1
CAM: Steel

FINISH
Chrome plated

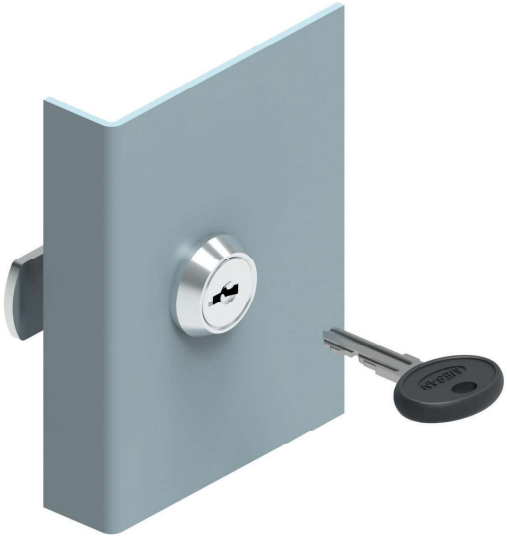

V: 1

KEY ROTATION ANGLE

180°

V: 2

KEY ROTATION ANGLE

90°

	CYLINDER	DD
	Keyed alike (Stainless steel dust cap)	03
	Keyed differ (Stainless steel dust cap)	32
	Euro key (5333)	05

Group Code	Version	Cylinder	Cam
050	V	DD	CC

For cams please check page: 175 (Cam-2)

tel | +90 212 721 44 44 fax | +90 212 721 44 45

050 CAM LOCK

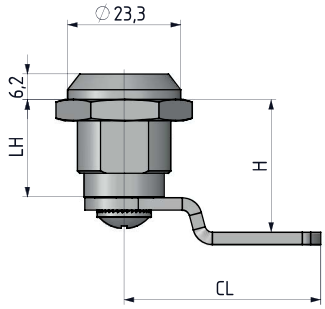

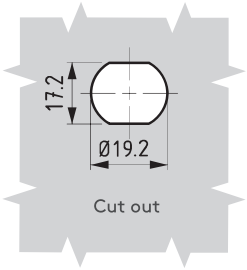

LH
20
25
30

KEY ROTATION ANGLE

90°

MATERIAL
HOUSING: Zamak DIN-EN 1774-ZnAl4Cu1
CAM: Steel

FINISH
Chrome plated

	CYLINDER	DD
	Keyed alike (Stainless steel dust cap)	03
	Keyed differ (Stainless steel dust cap)	32
	Euro key (5333)	05

Group Code	Housing Length	Cylinder	Cam
050	LH	DD	CC

For cams please check page: 175 (Cam-1)

HANDLE FOR LOCK — 050 A3

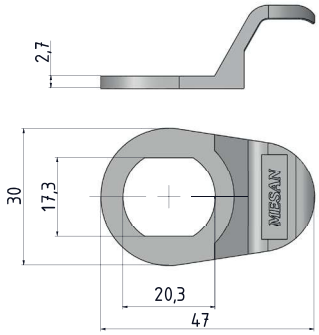

DUST CAP — 050 A4

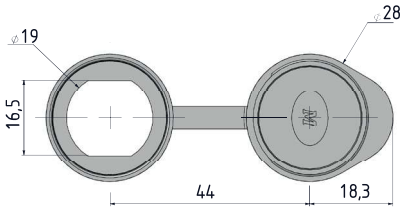

CAM LOCK FIXING PLATE FOR GLASS — 050 A1

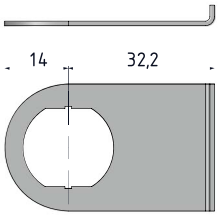

STRIKING PLATE — 030 A1

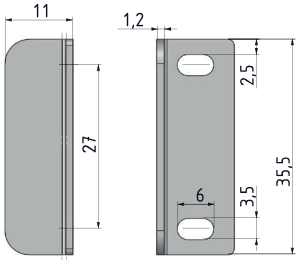

CAM LOCK FIXING PLATE FOR WOOD — 055 A1

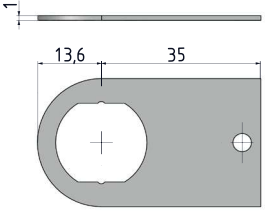

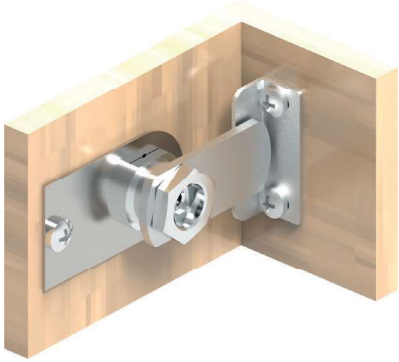

tel | +90 212 721 44 44 fax | +90 212 721 44 45

450 CAM LOCK SPRING LOADED

NEW

RoHS

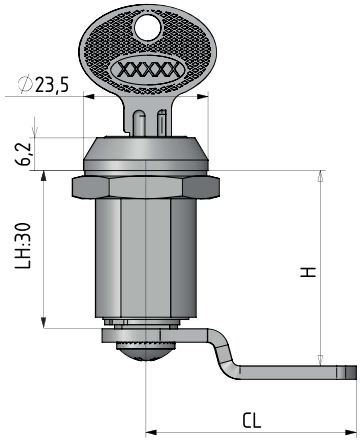

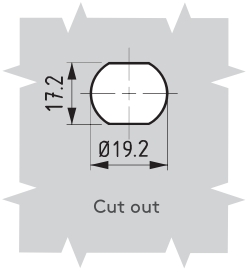

MATERIAL
HOUSING: Zamak DIN-EN 1774-ZnAl4Cu1
CAM: Steel

FINISH
Chrome plated

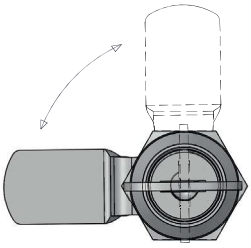

Attention

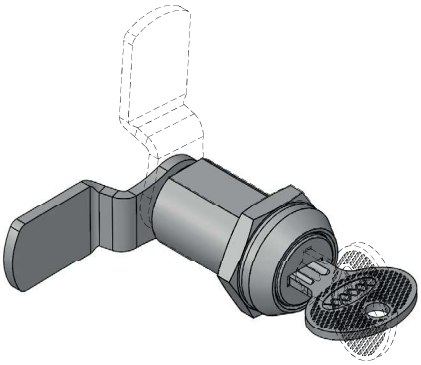

Cam throws back when the key is turned

KEY ROTATION ANGLE

	CYLINDER	DD
	Keyed alike (Stainless steel dust cap)	03
	Keyed differ (Stainless steel dust cap)	32
	Master system	04
	Euro key (5333)	05

Group Code	Cylinder	Cam
450	DD	CC

For cams please check page: 175 (Cam-1)

CAM LOCK

150

RoHS

IP 65

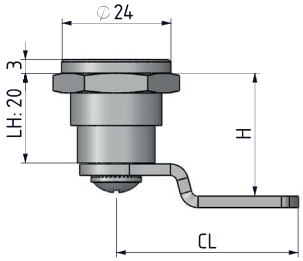

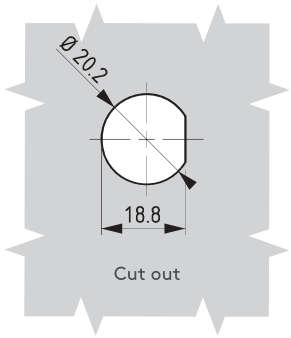

- Designed for polyester cabinets
- Very low profile head
- Please note special shape of mounting hole

MATERIAL

HOUSING: Zamak DIN-EN 1774-ZnAl4Cu1

CAM: Steel

FINISH

Chrome plated

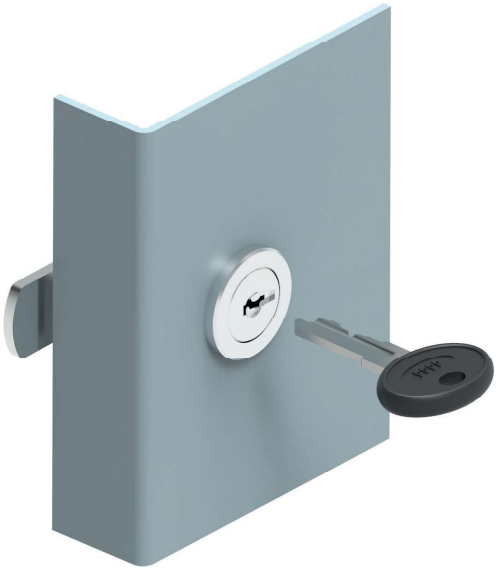

KEY ROTATION ANGLE

	CYLINDER	DD
	Keyed alike (Stainless steel dust cap)	03
	Keyed differ (Stainless steel dust cap)	32
	Euro key (5333)	05

Group Code	Housing Length	Cylinder	Cam
150	20	DD	CC

For cams please check page: 175 (Cam-1)

tel | +90 212 721 44 44 fax | +90 212 721 44 45

250 CAM LOCK

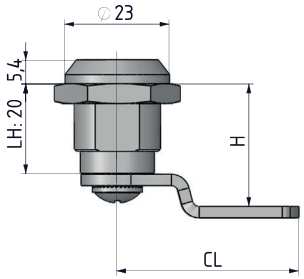

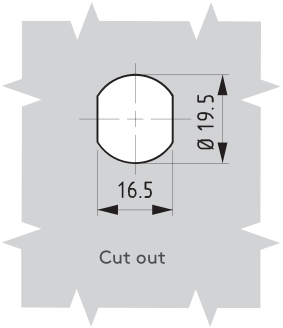

MATERIAL
HOUSING: Zamak DIN-EN 1774-ZnAl4Cu1
CAM: Steel

FINISH
Chrome plated

	CYLINDER	DD
	Keyed alike (Stainless steel dust cap)	03
	Keyed differ (Stainless steel dust cap)	32
	Euro key (5333)	05

Group Code	Housing Length	Cylinder	Cam
250	20	DD	CC

For cams please check page: 175 (Cam-1)

MINI CAM LOCK

057

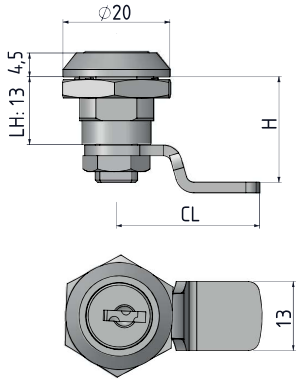

V: 1

Fixed by nut

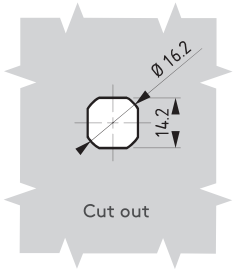

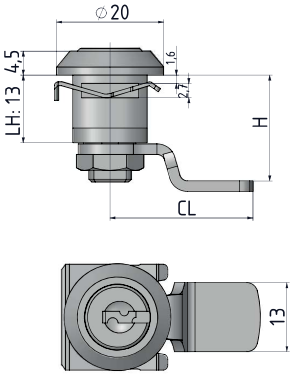

V: 3

Fixed by clips

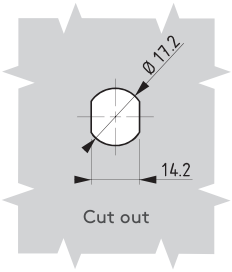

- Keyed differ has maximum 100 key combination
- Panel thickness in clips version It is between 0.8 mm-1.2 mm.

MATERIAL

HOUSING: Zamak DIN-EN 1774-ZnAl4Cu1

CAM: Steel

FINISH

Chrome

KEY ROTATION ANGLE

	CYLINDER	DD
	Keyed alike (Stainless steel dust cap)	03
	Keyed differ (Stainless steel dust cap)	32

Group Code	Version	Cylinder	Cam
057	V	DD	CC

For cams please check page: 175 (Cam-4)

tel | +90 212 721 44 44 fax | +90 212 721 44 45

157 MINI CAM LOCK

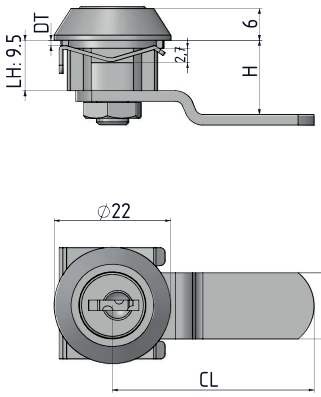

Fixed by clips

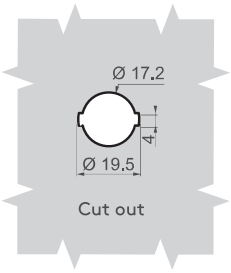

- Suitable for both steel and aluminium profile

MATERIAL

HOUSING: Zamak DIN-EN 1774-ZnAl4Cu1

CAM: Steel

STOCK CODE	CC	CH	CL	LH:9.5 H
30403487Y	27	0	16	9.5
31403040Y	28	1	33	10.5
31403032Y	23	1	38	10.5
30403469Y	24	5	38	14.5
*31403041Y	29	6	30	15.5

* Hook cam (CC: 29)

DOOR THICKNESS	VERSION
1.2 -1.5 mm	1
0.8 -1.2 mm	2

KEY ROTATION ANGLE

	CYLINDER	DD
	Keyed alike (Stainless steel dust cap)	03
	Keyed differ (Stainless steel dust cap)	32

Group Code	Version	Cylinder	Cam
157	V	DD	CC

MINI CAM LOCK

257

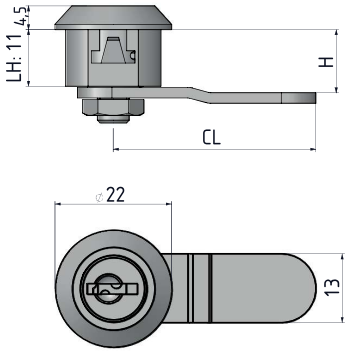

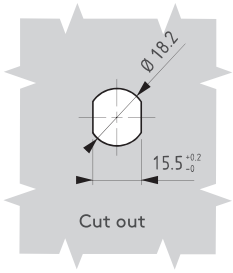

- Easy assembly with clips on housing
- Panel thickness is max 1.7 mm.

MATERIAL

HOUSING: Polyamide DIN-EN ISO 1043-1 PA6 GFR 30

CAM: Steel

FINISH

Chrome

KEY ROTATION ANGLE

45°

STOCK CODE	CC	CH	CL	LH:9.5 H	
30403487Y	27	0	16	11	
31403040Y	28	1	33	12	
31403032Y	23	1	38	12	
30403469Y	24	5	38	16	
31403041Y	29	6	30	17	Hook cam (CC: 29)

	CYLINDER	DD
	Keyed alike (Stainless steel dust cap)	03
	Keyed differ (Stainless steel dust cap)	32

Group Code	Cylinder	Cam
257	DD	CC

tel | +90 212 721 44 44 fax | +90 212 721 44 45

056 CAM LOCK

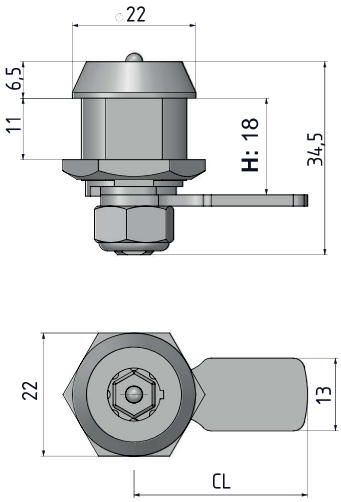

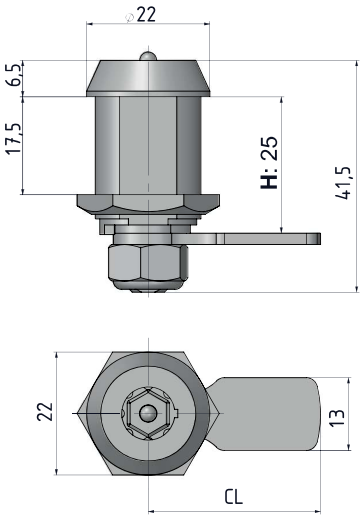

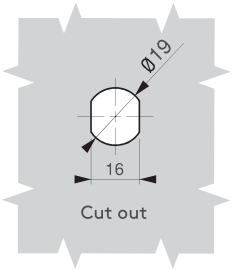

- High-security lock
- Unique key combination available
- Two different housing lengths (18 mm and 25 mm)
- For different cam alternatives contact Essentra

MATERIAL

HOUSING:	Brass
CAM:	Steel
NUT:	Brass

	CYLINDER	DD
	Keyed alike	01
	Keyed differ	02

Group Code	Grip	Cylinder
056	H	DD

For cams please check page: 175 (Cam-1)

FAST FIND INDEX

274

274

275

275

276

276

277

277

278

279

280

281

282

283

284

285

FURNITURE & STEEL CUPBOARD LOCKS

272-285

mesan
ESSENTRA COMPONENTS

e-mail | info@mesanlocks.com web | www.mesanlocks.com

CAM LOCK – T HANDLE 010

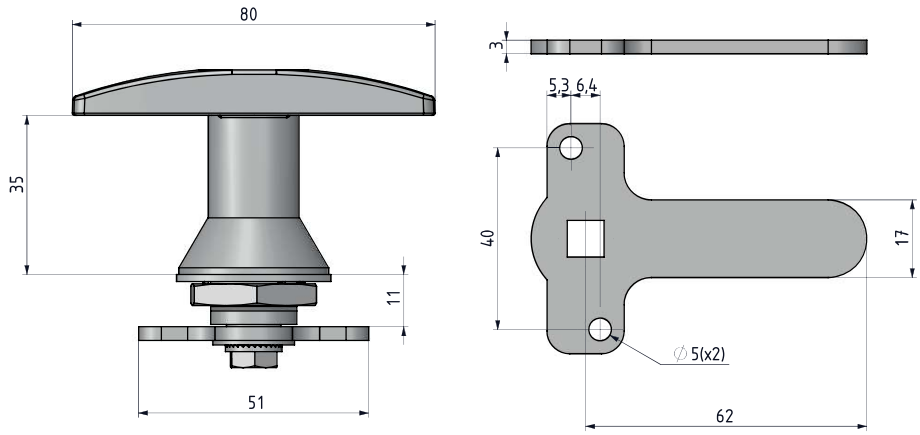

MATERIAL

HOUSING:	Zamak DIN-EN 1774-ZnAl4Cu1
HANDLE:	Zamak DIN-EN 1774-ZnAl4Cu1
CAM:	Steel

CAM LOCK – L HANDLE 011

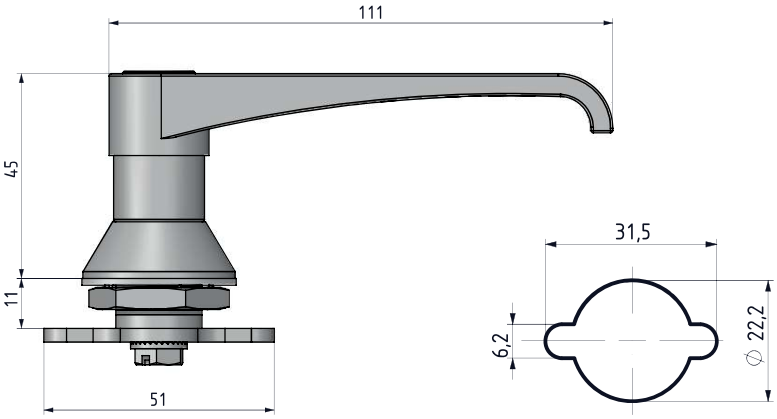

Cut Out

MATERIAL

HOUSING:	Zamak DIN-EN 1774-ZnAl4Cu1
HANDLE:	Zamak DIN-EN 1774-ZnAl4Cu1
CAM:	Steel

CYLINDER	SPECIFICATIONS	DD
	No cylinder	00
	Keyed alike	01
	Keyed differ	02
	Euro key (5333)	05
	CH751 (Stainless steel dust cap)	07

MATERIAL	M	FINISH	F
Zamak	1	Chrome plated	1
		Black coated	2

DOOR DIRECTION	
Right hand	001
Left hand	002

Group Code	Material	Finish	Cylinder	Door Direction
	1	F	DD	

tel | +90 212 721 44 44 fax | +90 212 721 44 45

021 GLASS-DOOR LOCK

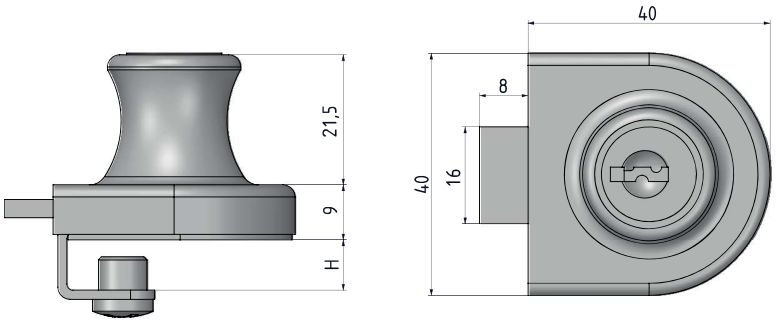

H: Glass Thickness
min : 4 mm
max: 7 mm

MATERIAL
BODY: Zamak DIN-EN 1774-ZnAl4Cu1

FINISH
Chrome plated

020 SLIDING-GLASS DOOR LOCK

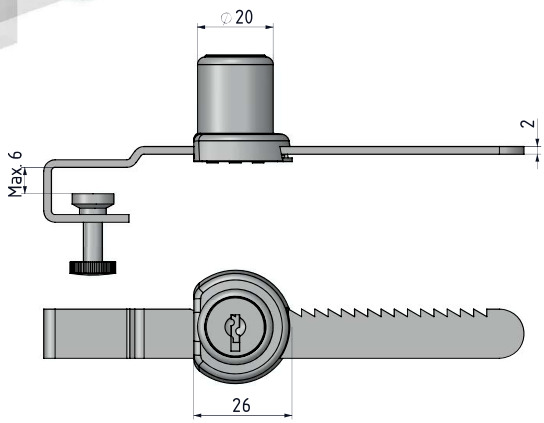

MATERIAL
BODY: Zamak DIN-EN 1774-ZnAl4Cu1
SLIDE: Stainless steel (AISI 304)

FINISH
Chrome plated

CYLINDER	SPECIFICATIONS	DD
	Keyed alike	01
	Keyed differ	02

Group Code	Cylinder
	DD

FURNITURE LOCK 132

NEW

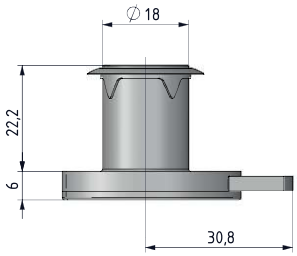

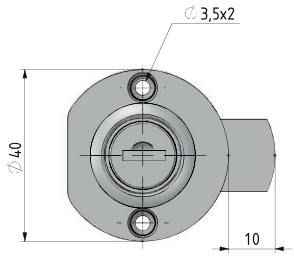

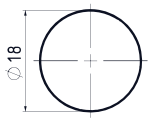

Cut Out

MATERIAL
BODY: Zamak DIN-EN 1774-ZnAl4Cu1
CAM: Steel

FINISH
Chrome plated

FURNITURE LOCK 032

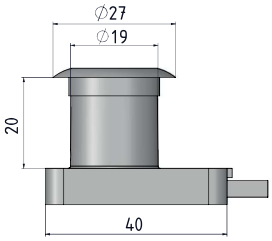

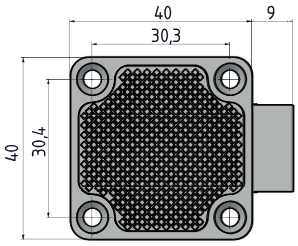

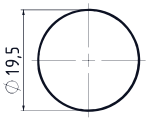

Cut Out

MATERIAL
BODY: Zamak DIN-EN 1774-ZnAl4Cu1
CAM: Steel

FINISH
Chrome plated

CYLINDER	SPECIFICATIONS	DD
	Keyed alike	01
	Keyed differ	02

Group Code	Cylinder
	DD

tel | +90 212 721 44 44 fax | +90 212 721 44 45

033 FURNITURE LOCK

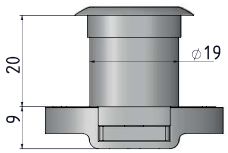

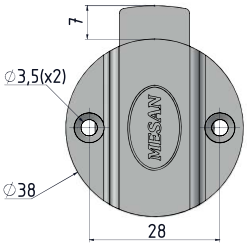

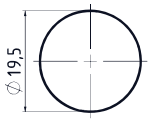

Cut Out

MATERIAL
BODY: Polyamide DIN-EN ISO 10431 Pa6 GFR 30
CAM: Steel

030 FURNITURE LOCK

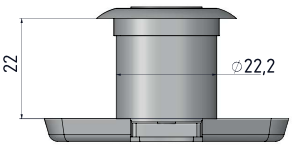

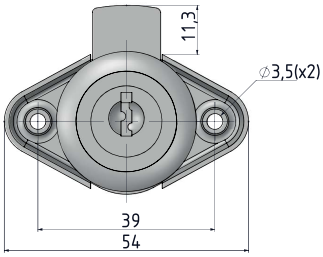

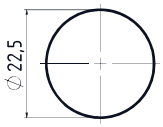

Cut Out

MATERIAL
BODY: Zamak DIN-EN 1774-ZnAl4Cu1
CAM: Steel

FINISH
Chrome plated

030 A1 STRIKING PLATE

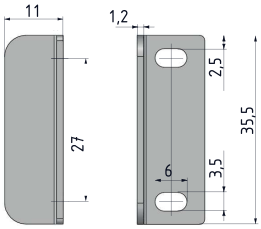

MATERIAL
BODY: Zamak DIN-EN 1774-ZnAl4Cu1

FINISH
Nickel plated

CYLINDER	SPECIFICATIONS	DD
	Keyed alike	01
	Keyed differ	02

Group Code	Cylinder
	DD

SLIDING-DOOR LOCK

159

NEW

MATERIAL
BODY: Stainless Steel
DRIVER: Stainless Steel

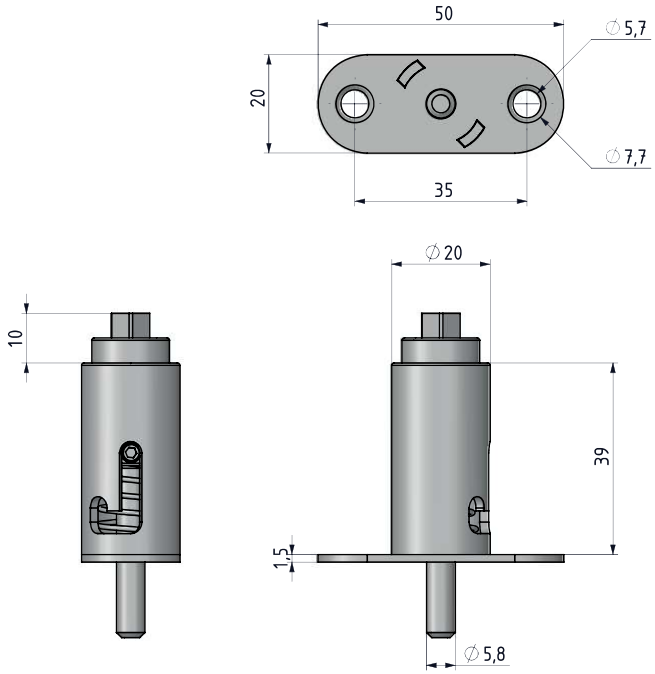

Unlocked position

Locked position

Group Code	Material	Finish
159	4	0

tel | +90 212 721 44 44 fax | +90 212 721 44 45

059 SLIDING-DOOR LOCK

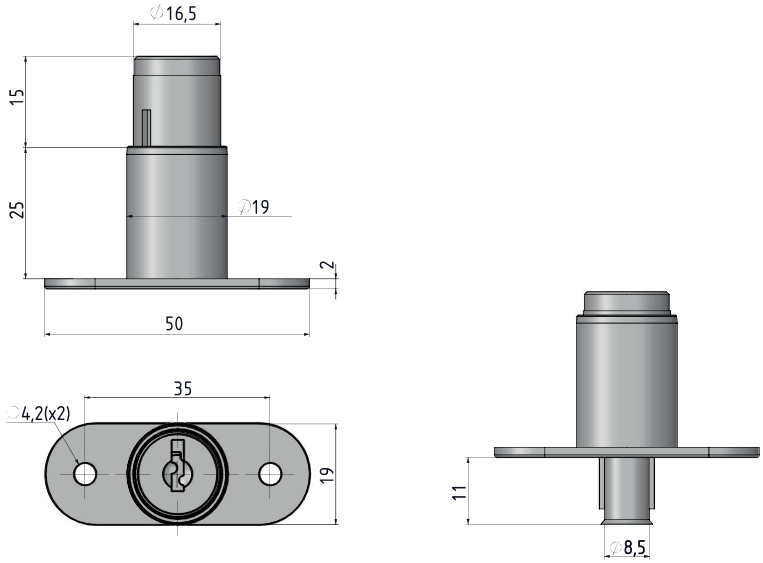

- Suitable for horizontal refrigerators
- Key alike and key differ available

MATERIAL

BODY: Zamak DIN-EN 1774-ZnAl4Cu1

CYLINDER: Zamak DIN-EN 1774-ZnAl4Cu1

FINISH

Chrome plated

Unlocked position

Locked position

CYLINDER	SPECIFICATIONS	DD
	Keyed alike	01
	Keyed differ	02

Group Code	Cylinder
059	DD

COMBINATION LOCK 4150

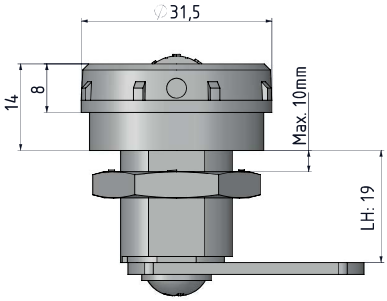

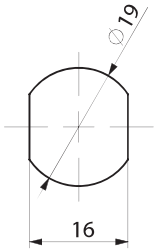

Cut Out

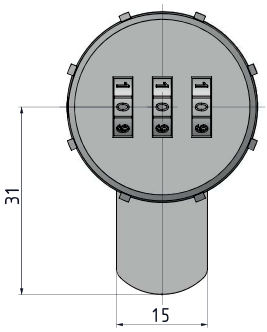

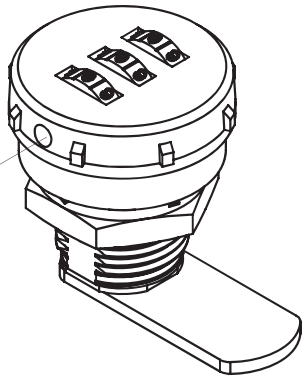

Button for changing the code

MATERIAL
BODY: Zamak DIN-EN 1774-ZnAl4Cu1
CAM: Steel

FINISH
Chrome plated

tel | +90 212 721 44 44 fax | +90 212 721 44 45

035 STEEL CUPBOARD LOCK

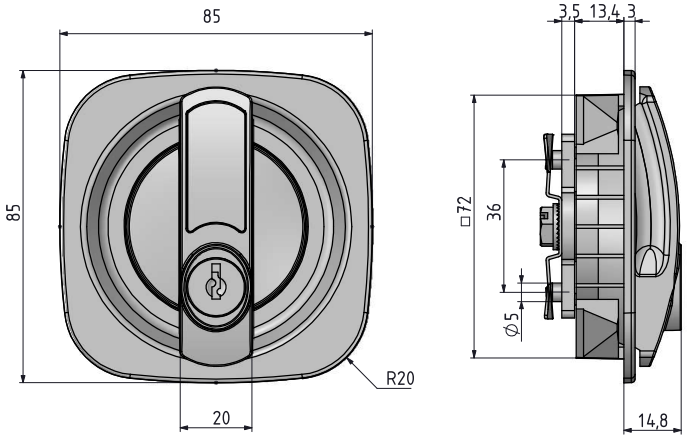

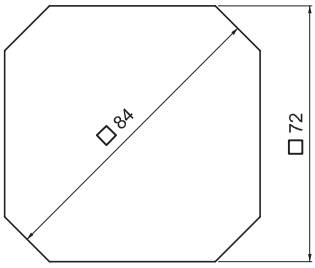

Cut Out

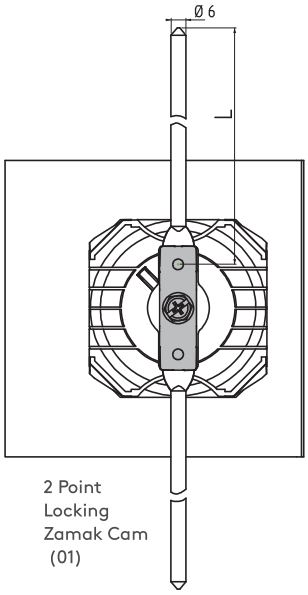

2 Point Locking Zamak Cam (01)

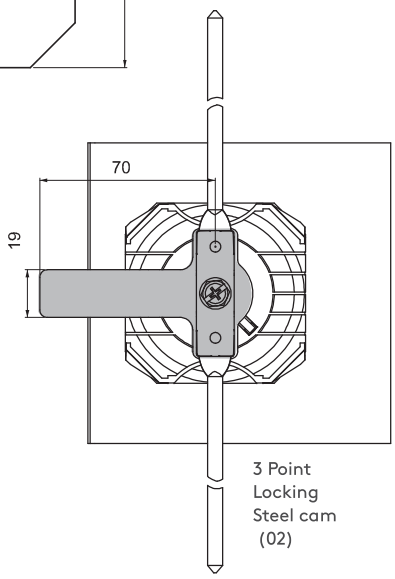

3 Point Locking Steel cam (02)

- Suitable for steel cupboards
- Easy rod assembly with special fixing plate
- Easy assembly with clips on body
- Two- or three-point locking optional

MATERIAL

BODY: Polyamide DIN-EN ISO 1043-1 Pa6 GFR 30

KNOB: Zamak DIN-EN 1774-ZnAl4Cu1w

01

Zamak cam

02

Steel cam

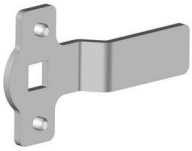

CYLINDER	SPECIFICATIONS	DD
	Keyed alike	01
	Keyed differ	02
	Master system	04

MATERIAL	M
Zamak	1
Plastic	2

FINISH	F
Chrome	1
Black coated	2
Gray coated	3
No finish	0

Group Code	Body		Handle		Cylinder	Cam
035	2	0	1	F	DD	CC

STEEL CUPBOARD LOCK 058

- Primarily for central locking applications
- Clip fixing

MATERIAL

BODY: Zamak DIN-EN 1774-ZnAl4Cu1

CYLINDER: Zamak DIN-EN 1774-ZnAl4C1

FINISH

Chrome plated

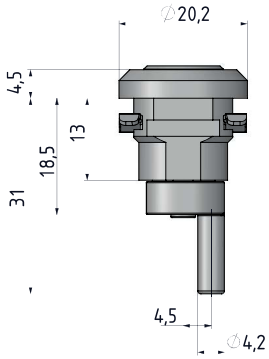

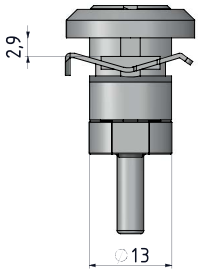

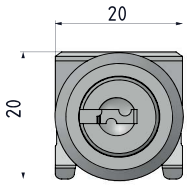

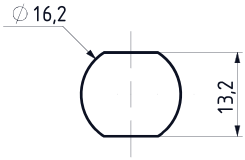

Cut Out

CYLINDER	SPECIFICATIONS	DD
	Keyed alike	01
	Keyed differ	02

Group Code	Cylinder
058	DD

tel | +90 212 721 44 44 fax | +90 212 721 44 45

158 STEEL CUPBOARD LOCK

NEW

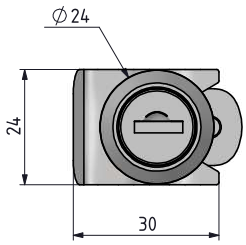

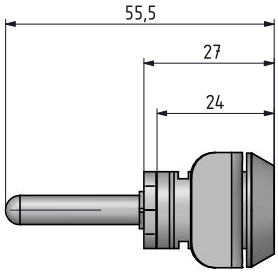

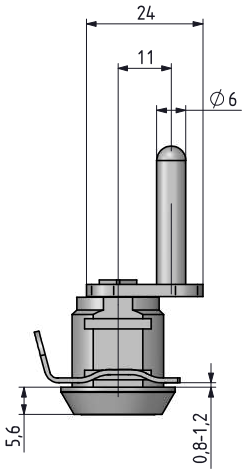

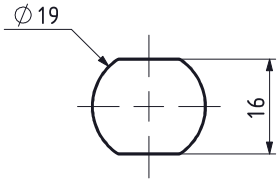

Cut Out

- Primarily for central locking applications
- Clip fixing

MATERIAL

BODY: Zamak DIN-EN 1774-ZnAl4Cu1

CYLINDER: Zamak DIN-EN 1774-ZnAl4Cu1

FINISH

Chrome plated

CYLINDER	SPECIFICATIONS	DD
	Keyed alike (Stainless steel dust cap)	03
	Keyed differ (Stainless steel dust cap)	32

Group Code	Cylinder
158	DD

FIRE HOSE CABINET LOCK — 013

- Designed for fire-hose cabinets
- Special fixing-plate supplied for easy fixing
- Flush design provides flat surface on cabinet
- Customized colours available

MATERIAL

BODY:	Zamak DIN-EN 1774-ZnAl4Cu1
KNOB:	Zamak DIN-EN 1774-ZnAl4Cu1
CAM:	Steel
FIXING PLATE:	Steel

For cams please check pages: 172 - 173

V:1

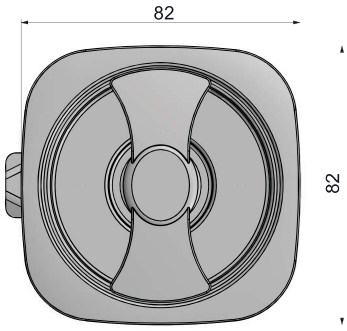

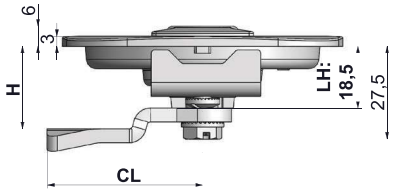

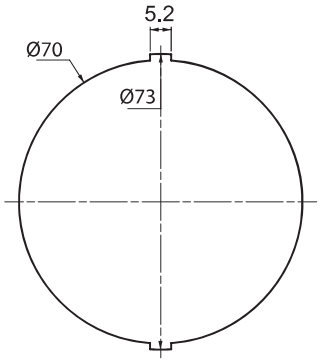

Cut Out

V:2

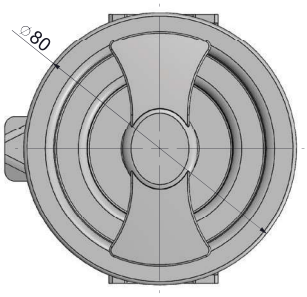

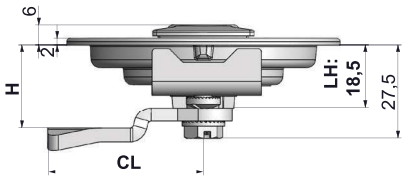

CC :70

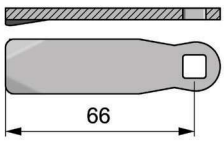

MATERIAL	M
Zamak	1

FINISH	F
Chrome	1
Black coated	2

Group Code	Version	Body		Handle		Cam
013	V	1	F	1	F	CC

tel | +90 212 721 44 44 fax | +90 212 721 44 45

113 FIRE-HOSE CABINET LOCK

V:1

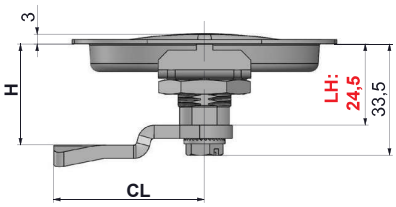

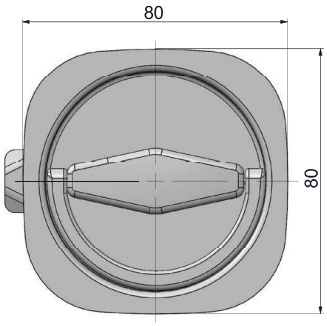

NEW

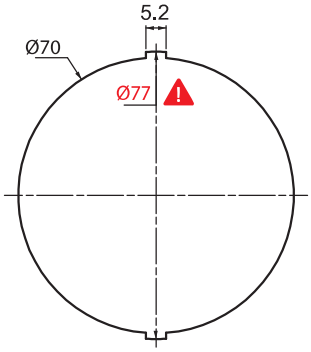

Cut Out

V:2

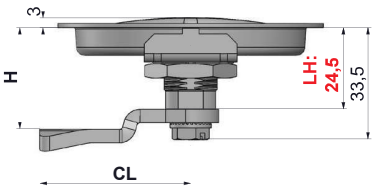

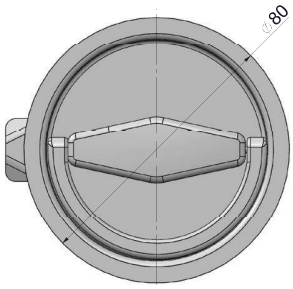

CC :70

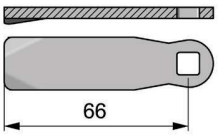

- Designed for fire-hose cabinet
- Special fixing plate supplied for easy fixing
- Flush design provides flat surface on cabinet
- Customized colours available

MATERIAL

BODY:	Steel
KNOB:	Steel
CAM:	Steel
FIXING PLATE:	Steel

MATERIAL	M
Steel	6

FINISH	F
Chrome	1
Black coated	2

Group Code	Version	Body		Handle		Cam
113	V	6	F	6	F	CC

For cams please check pages: 172 - 173